CrustBuster
SPEED KING INC.

P.O. Box 526 - Spearville, Kansas 67876 - (620) 227-7106
crustbuster.com

Seed Box Tote

Back Load Unit

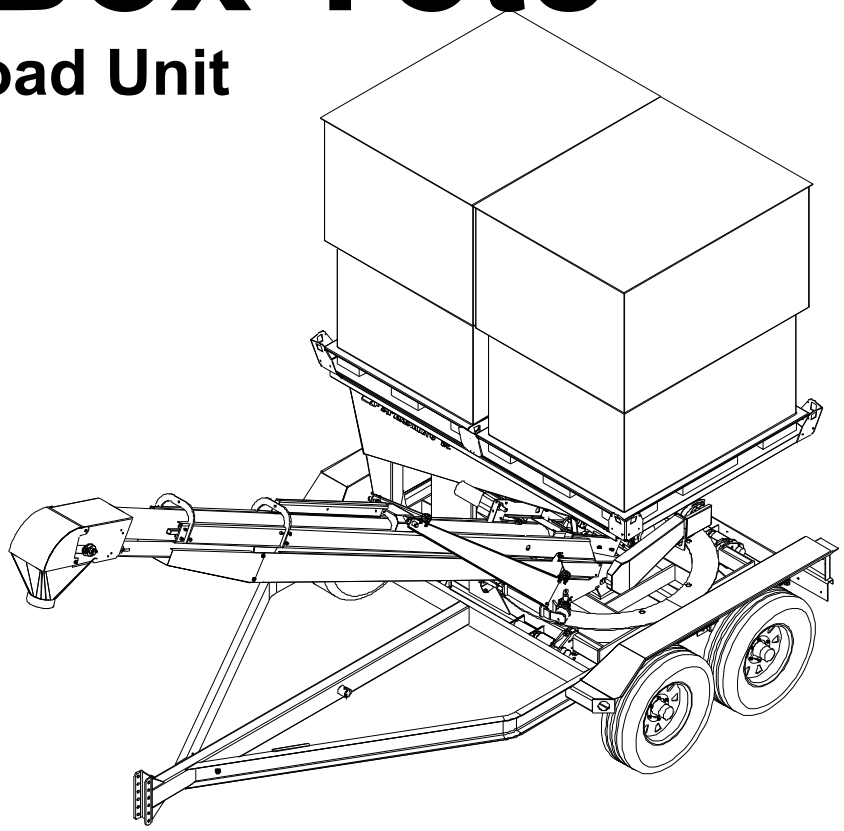

OWNER'S MANUAL

#04175600 UPDATED 04/2021 (2013)

Table of Contents

Warranty Information 1
Operator Qualifications. 2
Safety and Warnings 3-6
Fuel Valve 7
Loading Seed in Tote Boxes 8-9
Wiring Diagram 10-11
Belt Assembly 12
Operation, Maintenance, Belt Training . 13-14
Dimensions 15

Repair Parts:
- Stand - Gas with Telescoping Tube and Remote (Prior 2021) . . . 16-17
- Stand - Gas with Standard Tube and Remote (Prior 2021) . . . 18-19
- Stand - Electric with Standard Tube (Prior 2021) 20-21
- Stand - Gas with Telescoping Tube and Remote 22-23
- Stand - Gas Hardwire w/ Actuator . . 24-25
- Stand - Gas Remote w/ Actuator . . . 26-27
- Stand - Electric w/ Actuator 28-29
- Standard Tube -Gas 30-31
- Standard Tube -Electric 32-33
- Standard Tube -Gas w/ Actuator . . . 34-35
- Standard Tube -Electric w/ Actuator . 36-37
- Telescoping Tube Assembly
  - Gas w/ Actuator 38-39
  - Gas 40-41
  - Support Frame 41
  - Top and LowerTubes 42
  - Wind Guard 43
  - Upper Roller Bracket 43
  - S-wrap Roller 43
  - Electric Winch 44
  - Shaft & Sprocket Assy 44
  - Handle Assy. 44
- Seed Spouts 45
- Flexible Tube Spouts 46
- Engine Assemblies 47
- Acutator Assy/Dry Talc 48
- Trailer 54-55

Options:
- Remote Enclosure Assy 48-51
- Remote Control 52

Identification

Your Seed Tender is identified by a Serial Number and Model Number. Record these numbers in the spaces provided in this manual and refer to them when ordering parts or requesting service.

Serial Number	Model Number

Warranty

CrustBuster/Speed King, Inc. of Spearville, Kansas, warrants consumer products, so far as the same is of our own manufacture, against defects in material and workmanship under normal and reasonable use for a period of one (1) year after date of delivery to the original purchaser. Our obligation under this warranty is limited, however, to furnishing a replacement part for a defective part, or at our option to repair the defective parts without charge, either method F.O.B. our works, provided the consumer gives CrustBuster/Speed King,Inc. written notice within ten (10) days after said part appears to be defective and affords CrustBuster/Speed King,Inc. an opportunity to inspect. Unless otherwise expressly agreed to by CrustBuster/Speed King,Inc., the consumer shall bear the expense of installation.

CrustBuster/Speed King, Inc. will not be liable for consequential damages where the loss is commercial, including but not limited to loss of profit, delays or expenses.

This warranty sets forth the extent of our liability. The foregoing is in lieu of all other warranties, expressed or implied, including any warranties that extend beyond the description of the product.

Operator Qualifications

Operation of this Seed Tote shall be limited to competent and experienced persons. In addition, anyone who will operate or work around this equipment must use good common sense. In order to be qualified, he or she must also know and meet all other requirements, such as:

1. Some regulations specify that no one under the age of 16 may operate power machinery. It is your responsibility to know what these regulations are in your area or situation.

2. Current OSHA regulations state in part: "At the time of initial assignment and at least annually thereafter the employer shall instruct EVERY employee in the safe operation of servicing of all equipment with which the employer is, or will be involved."

3. Unqualified persons are to STAY OUT of the work area.

4. A person who has not read and understood all operating and safety instructions is not qualified to operate the machinery.



FAILURE TO READ THIS SEED TENDER MANUAL AND ITS SAFETY INSTRUCTIONS IS A MISUSE OF THE EQUIPMENT.



Sign Off Sheet

As a requirement of OSHA, it is necessary for the employer to train the employee in the safe operation and safety procedures with this Seed Tender. We include this sign off sheet for your convenience and personal record keeping.

DATE	EMPLOYER	EMPLOYER'S SIGNATURE

BE ALERT!

Your Safety is involved.

General Safety Statement

WATCH FOR THIS SYMBOL. IT POINTS OUT IMPORTANT SAFETY PRECAUTIONS. IT MEANS "ATTENTION —— BECOME ALERT!"

YOUR SAFETY IS INVOLVED.

It is your responsibility as an owner, operator, or supervisor to know and instruct everyone using this Seed Tender at the time of initial assignment and at least annually thereafter, of the proper operation, precautions, and work hazards which exist in the operation of this Seed Tender in accordance with OSHA Regulations.

Safety Is No Accident

The following safety instructions, combined with common sense, will save your equipment from needless damage and the operator from unnecessary exposure to personal hazard. Pay special attention to the caution notes in the text. Review this manual at least once each year with new and/or experienced operators.

1. Read and understand the operator's manual before operating this Seed Tender. Failure to do so is considered a misuse of the equipment.
2. Make sure Seed Tender is secure before operating.
3. Always keep children away from Seed Tender when operating.
4. Make sure everyone that is not directly involved with the operation is out of the work area before beginning the operation.
5. Make sure all safety devices, shields, and guards are in place and are functional before beginning the operation.
6. Shut off power to adjust, service, or clean.
7. Keep hands, feet, and clothing away from moving parts. It is a good idea to remove all jewelry before starting the operation.
8. Visually inspect the Seed Tender periodically during operation for signs of excessive vibration, loose fasteners, and unusual noises.
9. Before transportation unit, make sure tube assembly is locked into place and safety strap is on and secure.
10. Keep box tote on level surface.

DANGER: Indicates an imminently hazardous situation which, if not avoided, will result in death or serious injury. DANGER

WARNING: Indicates a hazardous situation which, if not avoided, could result in death or serious injury. WARNING

CAUTION: Indicates a potentially hazardous situation which, if not avoided, may result in minor or moderate injury. CAUTION

NOTICE: Used to address practices not related to physical injury. NOTICE

Safety Decals

REMEMBER: If Safety signs have been damaged, removed, become illegible or parts replaced without decals, new decals must be applied. New decals are available from your authorized distributor or factory. Individual decals shown below.

#05326400



#05303300

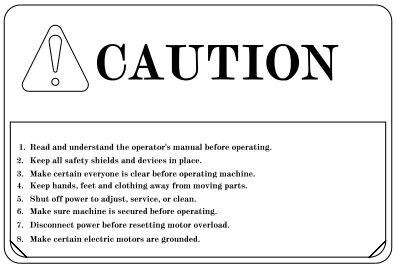

#05312400



#05328000



#05316500

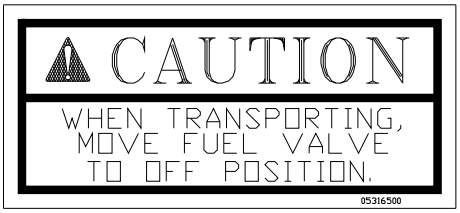

#05310800

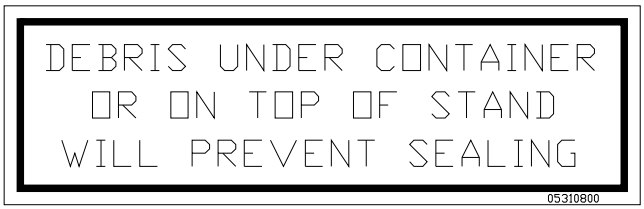

Danger

BE ALERT! YOUR PERSONAL SAFETY IS INVOLVED.
ALWAYS PARK TENDER ON LEVEL SURFACE TO UNLOAD.

Before releasing safety strap that secures tube assembly, make sure tender is sitting on a level surface.

If parked on an unlevel surface, and the tube assembly is not restrained, it could swing rapidly and out of control to one side or the other.

The rope attached to the tube is to assist in guiding the tube. If tube is swinging out of control, the rope may not control the tube.

If parked on an unlevel surface with the spout side down, *(See illustration **A**)* the tube could rapidly swing out.

ILLUSTRATION A

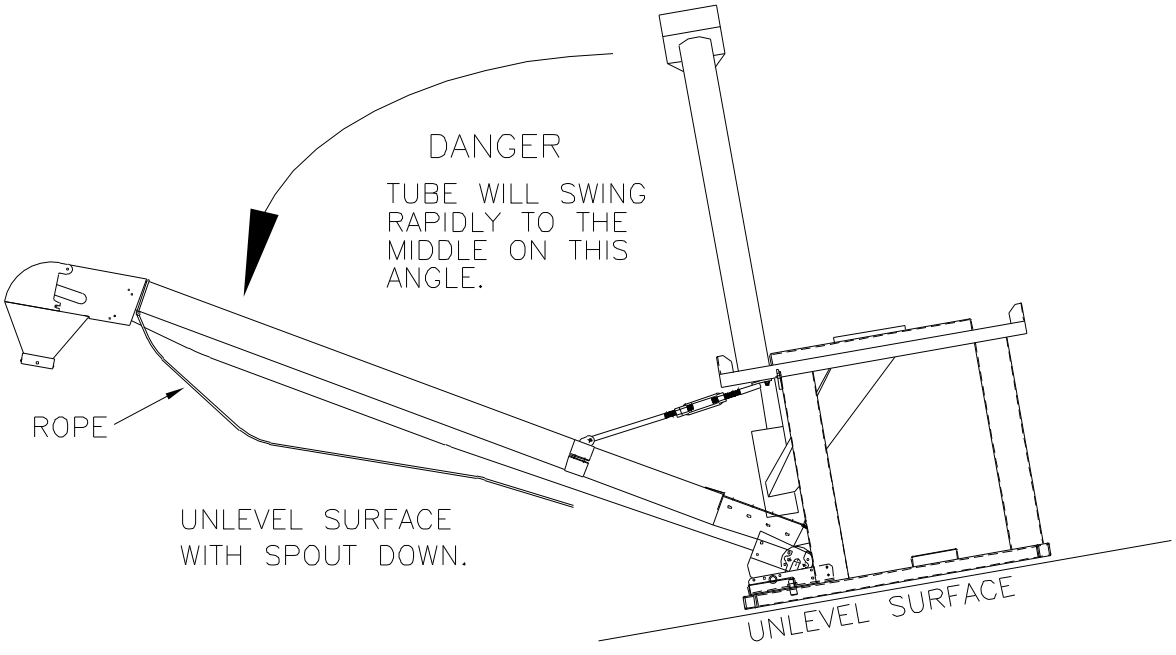

Danger

ILLUSTRATION B

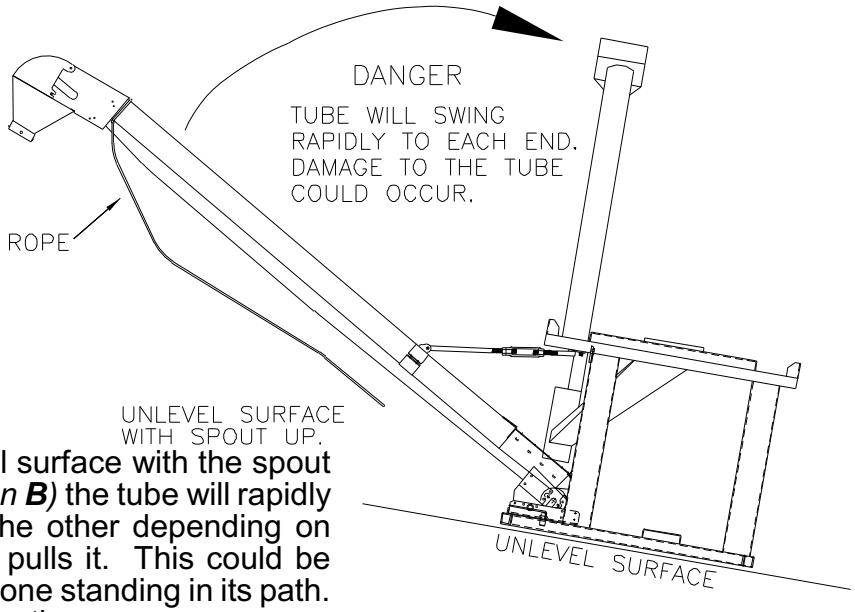

If parked on an unlevel surface with the spout side up, *(See illustration **B**)* the tube will rapidly swing to one end or the other depending on which side the gravity pulls it. This could be very hazardous for anyone standing in its path. Be very cautious of situation.

If parked on an unlevel surface with the spout side up, *(See illustration **C**)* the tube could rapidly swing from one end to the other.

This could be very hazardous for anyone standing in its path. Be very cautious of this situation. This could also cause damage to the tube assembly.

ILLUSTRATION C

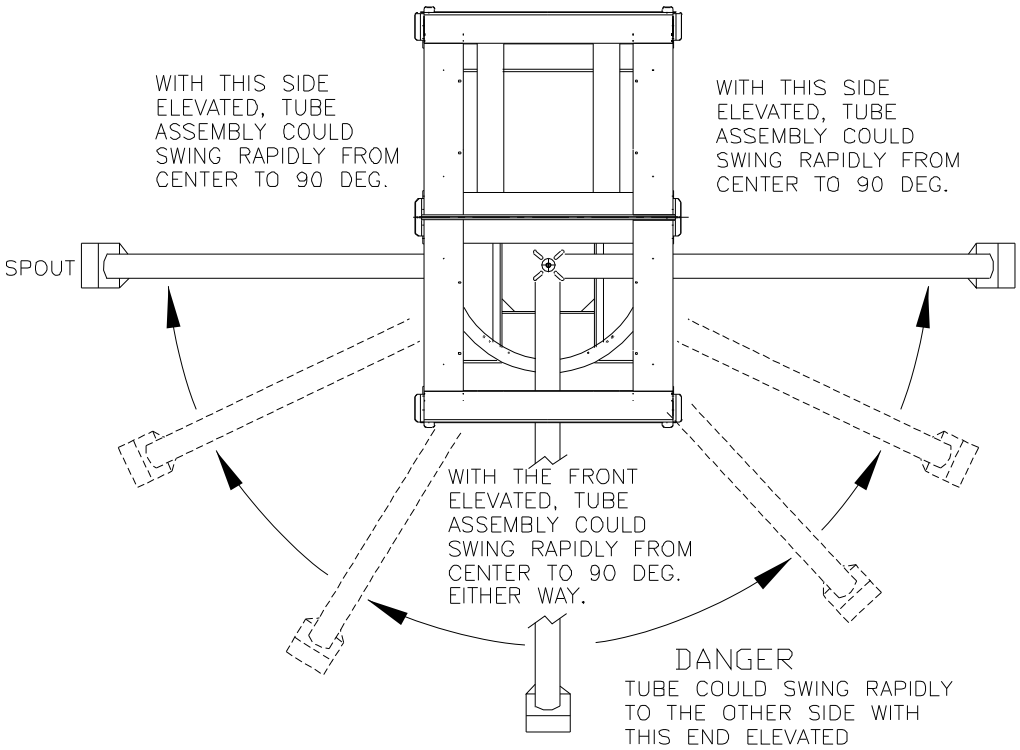

CAUTION

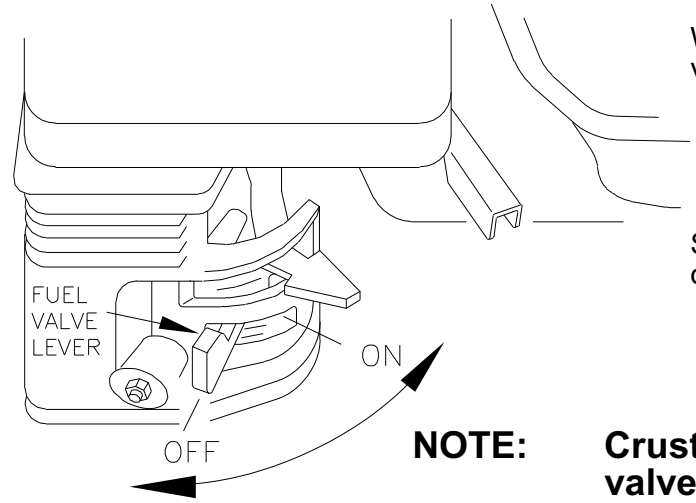

FUEL VALVE

When engine is not in use, leave the fuel valve lever in the OFF position to prevent

- carburetor flooding
- fuel in the oil crank case because of transporting vibrations
- the possibility of fuel leakage.

See engine owner's manual to help you avoid other damage to your engine.

NOTE: CrustBuster recommends fuel valve be shut off and the motor run completely out of fuel before transporting.

Assembly

CAUTION

ALWAYS LIFT THE CONTAINER FROM THE BOTTOM. NEVER USE STRAPS OR LIFT BY TYING ANYTHING TO THE SIDES OF THE CONTAINER. REQUIRES MINIMUM 3000 LB. FORKLIFT TO PICK UP FULL CONTAINER. OAK INSERTS, LOCATED IN THE BASE OF THE CONTAINER, REDUCE LIPPAGE ON FORKLIFT FORKS AND PROVIDE STRUCTURAL SUPPORT.

NOTE:
For proper seal to hopper, container should be lowered straight down as shown. Make sure there is no debris on hopper top. Make sure rubber skirtboard deflector is not bent under and preventing a good seal.

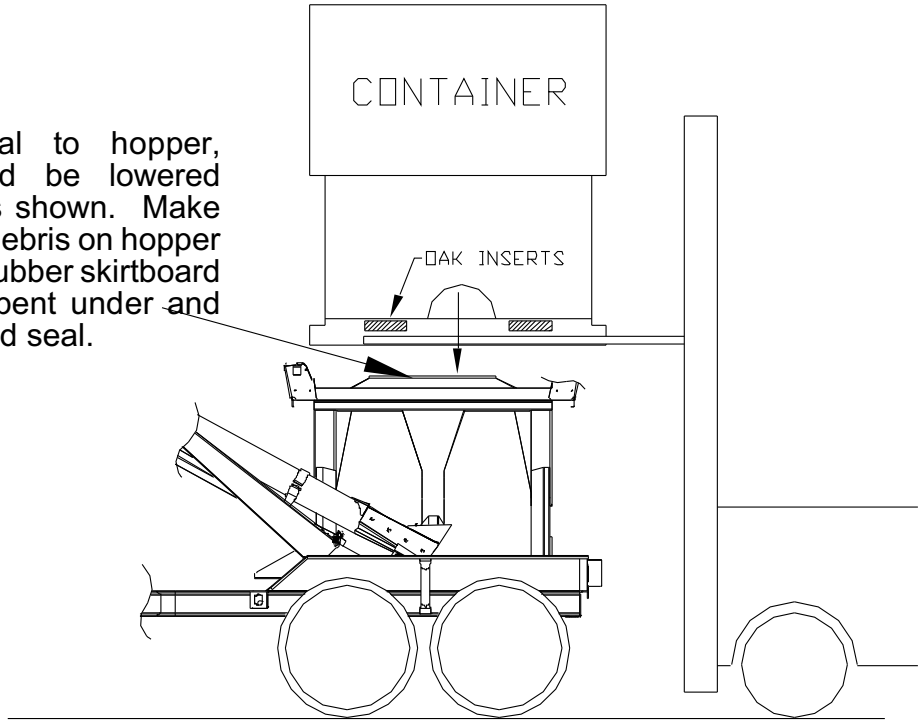

CAUTION

FAILURE TO EXTEND FORKS UNDER OAK INSERTS WILL CAUSE DAMAGE TO SLIDE DOOR ON THE UNDER SIDE OF CONTAINER. THIS IS A DANGEROUS SITUATION ALSO.

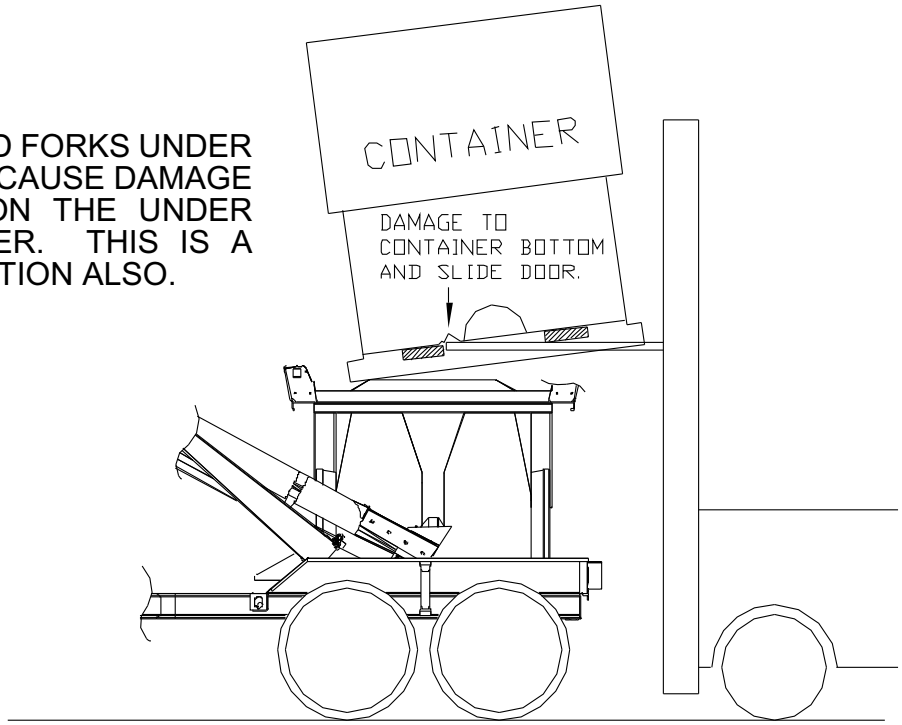

Seed Box Loading

TO LOAD SEED BOXES, THE TOTE SHOULD BE ON LEVEL GROUND OR SURFACE AS SHOWN.

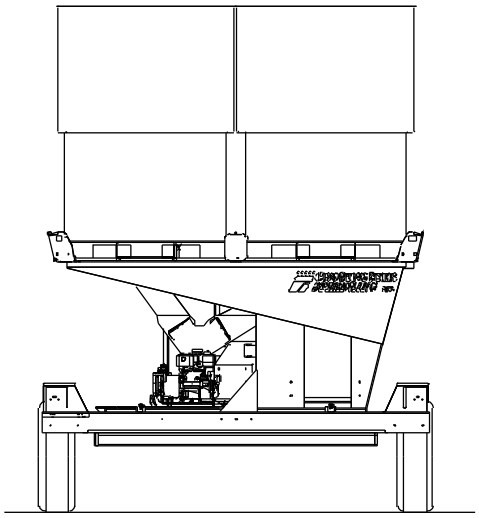

IF IT IS NOT POSSIBLE TO LOAD ON A LEVEL SURFACE, LOAD THE DOWN HILL CONTAINER FIRST, AS SHOWN.

THIS IS THE RIGHT WAY!

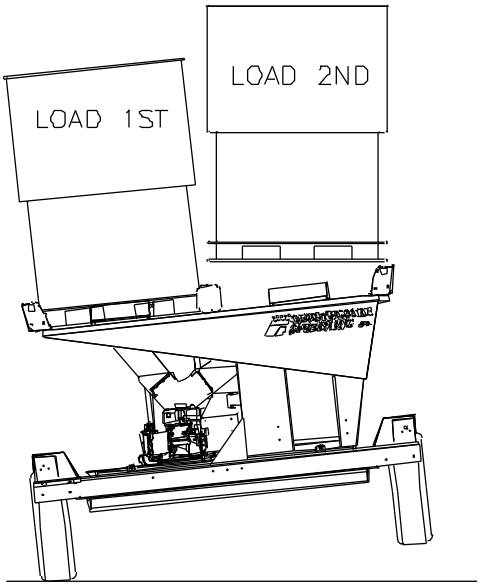

IF YOU LOAD THE UP HILL BOX FIRST, IT WILL BE VERY DIFFICULT TO GET THE SECOND BOX LOADED.

THIS IS THE WRONG WAY!

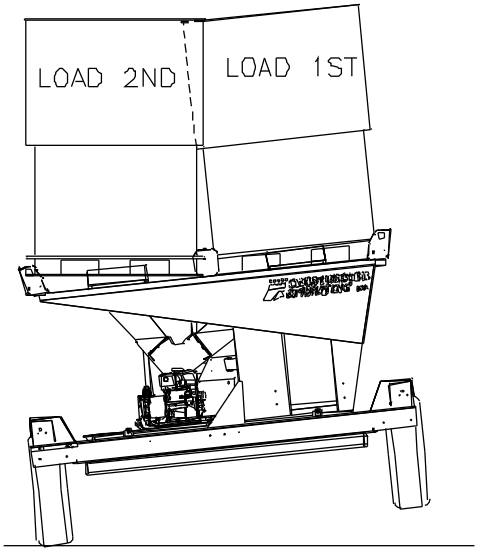

Wiring Diagram
For Electric Units

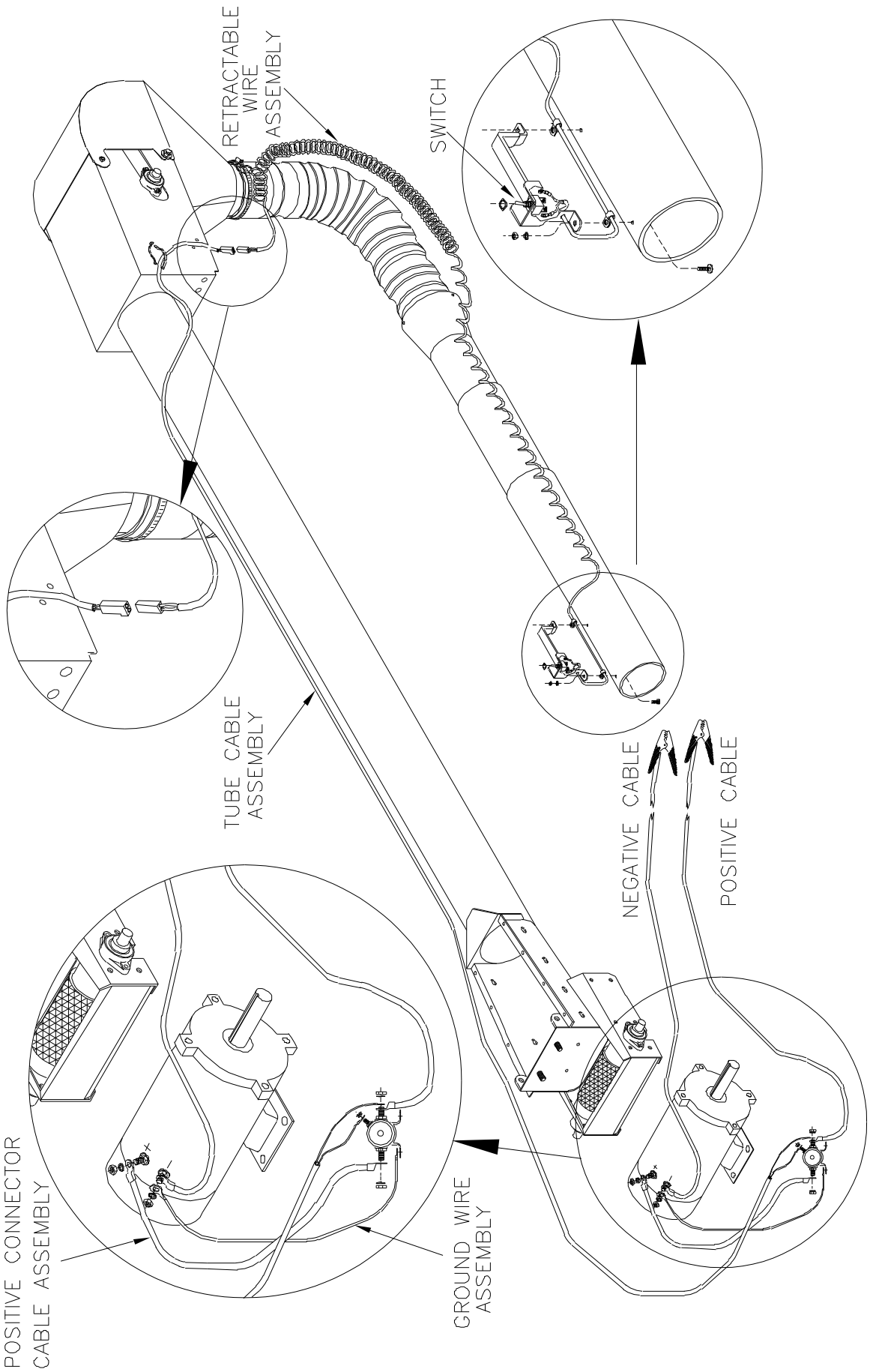

Wiring Diagram
For Gas Units (without remote)

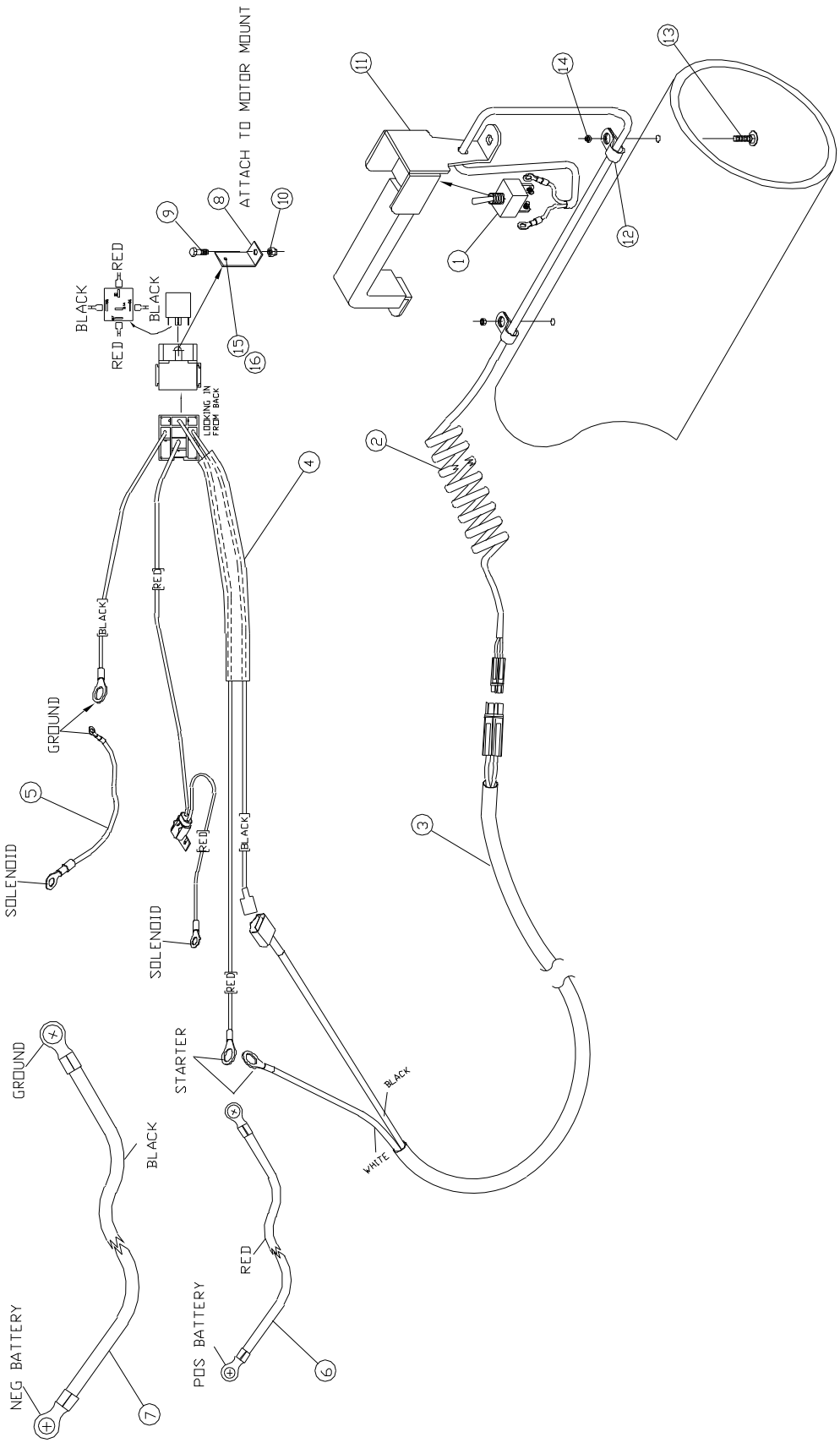

Belt Assembly

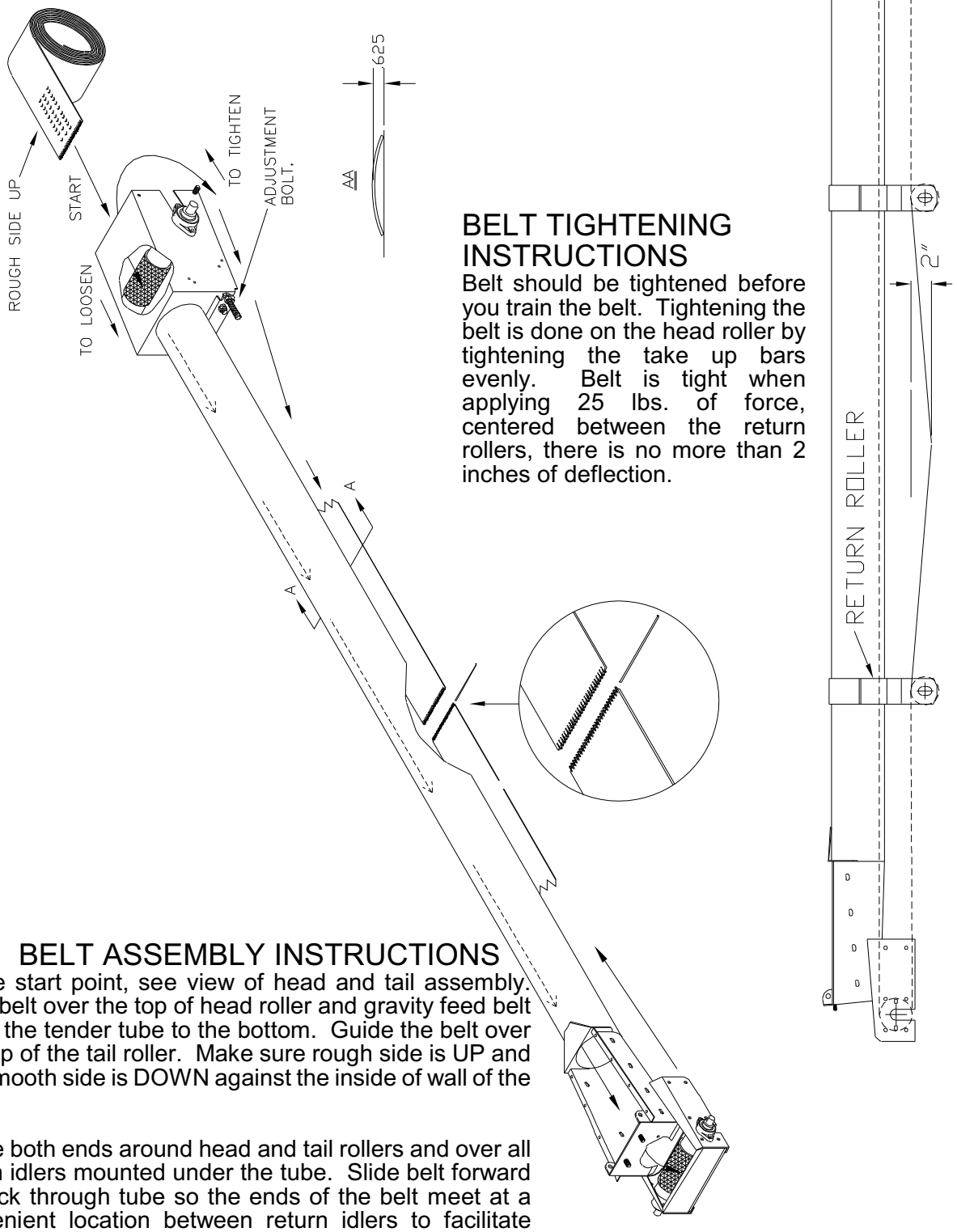

BELT TIGHTENING INSTRUCTIONS

Belt should be tightened before you train the belt. Tightening the belt is done on the head roller by tightening the take up bars evenly. Belt is tight when applying 25 lbs. of force, centered between the return rollers, there is no more than 2 inches of deflection.

BELT ASSEMBLY INSTRUCTIONS

At the start point, see view of head and tail assembly. Drop belt over the top of head roller and gravity feed belt down the tender tube to the bottom. Guide the belt over the top of the tail roller. Make sure rough side is UP and the smooth side is DOWN against the inside of wall of the tube.

Route both ends around head and tail rollers and over all return idlers mounted under the tube. Slide belt forward or back through tube so the ends of the belt meet at a convenient location between return idlers to facilitate joining.

Align and interlace belt and clipper lacings. Slip splice pin (Plastic covered cable) through clipper lacings to secure.

Pre-Operation Check List

1. Check all bearings for proper lubrication.
2. Check the tube for foreign material.
3. Check belt for proper tension.
4. Start unit and check tender belt alignment while unit is empty.

BELT CARE ……

It is suggested that the unit be run every two to three days or more often if possible. This tends to keep the belt alive and stops any forming of the belt to the curvature of the tube while the unit is not in use.

NOTE: Belt may deteriorate if not in use and exposed to weather conditions for any prolonged period of time.

Operation Sequence

1. Check drive chain for proper tension.
2. Make sure tender belt is properly tensioned.
3. Allow unit to run empty for a few minutes to flex tender belt.
4. Check tender belt for proper alignment.
5. Before shutting power off, be certain head and tail unit is empty.

STORAGE ……

Temporary Storage

1. Relieve tension on tender belt.
2. Store all belt equipment in a dry place. If equipment cannot be stored out of the weather, cover engine and mechanical parts with waterproof material.

Prolonged Storage

1. Remove all belts and store in a cool, dark, dry place.
2. Wash tender belt thoroughly.
3. Wash tender tube both inside and out.
4. Lubricate all bearings.
5. Store in a dry shelter.

Maintenance

Preventive maintenance is the key to the long life of any mechanical device.

Careful and systematic inspection of the Seed Tender will result in maximum, trouble-free service.

BELT REPLACEMENT ……

To replace the belt, cut it into and hand rotate the head roller until belt has been removed. Install appropriate belt as outlined in assembly instructions.

HEAD ASSEMBLY TAKE-UP ……

After extended use, the tender belt may stretch to the point that there is not sufficient take-up in the head assembly to tighten it. Obtain additional take-up by cutting a 6" to 8" section from the belt. A new splice lacing may be ordered from your CrustBuster/Speed King distributor or from the factory.

PERIODIC CLEAN-OUT ……

Due to the characteristics of certain materials, residue sometimes collects between the tender belt and the tube. Check the unit periodically for any material build up in this area. If residue appears excessive, remove the tender belt and thoroughly wash the belt and tube. Allow belt and tube to dry before reinstalling the belt.

When the tender is not being used, secure belt to the tube to prevent belt from flopping in the wind, possibly breaking return idlers or ripping belt.

LUBRICATION ……

All bearings which are fitted with grease zerks should be lubricated at the conclusion of each operating day. Before greasing the bearings, make certain the zerks are free of dirt, otherwise this will be passed into the bearing race. If the unit will be out of service for a period of time, purge the bearings.

BELT TRAINING PROCEDURE ……

A tender belt correctly installed and trained will run straight and true. The belt must run centered on all terminal rollers, take-up rollers, and return idlers throughout the entire belt length.

Incorrect installation and training can result in severe edge damage, material spillage, material leakage through the skirt rubber at the loading point, and excessive power demands. Material spillage is the usual reason for belt carcass ruptures and pulley cover gouging and stripping, while leakage at the skirt rubber results in excessive conveyor cover wear under the skirts.

Maintenance - *(cont'd)*

ALIGNMENT ……

All rotating parts -head roller, tail roller, and return idlers- must be at a 90 degree angle to the direction of belt travel, must be level, and the midpoint of each centered on a line when properly aligned.

Alignment is checked by running a tight wire from the center of head roller to center of the tail roller.

Level all rotating parts. If a part is not level, the belt will run to the lower side.

BELT SPLICING ……

A belt must not run out at the splice area. Runout will occur if the belt is not cut square or splice is not installed square.

Operation

1. Prior to the start-up, check to see that belt is free from any objects that would bind or tear.
2. On starting for the first time, with no load on belt, apply power for a few seconds only to see that the tender belt is well centered in the tube and on the return.
3. It should be noted at this time that too much tension on the tender belt will make adjustment or training much more difficult, shorten the life of the belt, and waste power. The belt should be tensioned tight enough so the drive roller does not slip. The belt is tight when applying 25 pounds of force, centered between the return rollers, there is no more than 2 inches of deflection.

BELT TRAINING ……

It is essential that the tender belt be properly trained at all times. For this reason, all rotating parts should always be at right angles to the tender belt.

Slight adjustment of roller shafts may be required to keep belts centered on them i.e., if the belt runs to one side of the roller - apply more tension to this side of the belt by advancing the roller shaft on this side. This can be done on the head section as long as adjustment bolt does not vary more than 1/4". If it does, and belt will still not center on both rollers, the tail section is probably out of square.

To square tail section roller, even out the head roller until adjustment bolts are equal. On tail section, loosen bearing bolts on opposite side the belt is off. CAUTION: LOOSEN BEARING BOLTS JUST ENOUGH SO IT TAKES A BLOCK OF WOOD AND A SMALL HAMMER TO MOVE THE BEARING. To adjust tail section, 1/32" in most cases, will move the belt. Tail roller bearings only have about a 1/16" to 3/32" movement total. Tighten the bearing, and go to the head section and retrain the belt.

If the belt tends to veer to one side of the return strand, the belt can be centered by "knocking" ahead (in the direction of belt travel) the end of the return idler to which the belt runs. A belt correctly installed will usually train well both empty and loaded, except as noted:

1. One or more rotating parts not in alignment.
2. Belt tensions in some part of system (usually at tail section) are below minimum recommended.
3. Belt not loaded centrally.

When a belt is initially started, it should be jogged around the system to determine if a major runout occurs which could damage belt and belt edges. If runout occurs at some point of the system, the reason is usually a return idler or roller out of alignment before the runout. Alignment should be rechecked before restarting.

After the belt can be safely run without damage, final training should begin with the head roller. The belt must enter the head roller in the center without movement from side to side. If the belt is not centered on the tail pulley, the return strand of belt should be observed for any section which is not centered on the return idlers. If the belt is not centered at some point, move return idlers starting before this point to correct centering of belt. Movement of idler bracket should be gradual and only 1/16" to 1/8" remembering that the belt will move in the direction that it first contacts the idler. The same corrective action should be taken at the tail roller.

After the belt is trained empty, the belt should be trained with a load. The take-up adjustments are made to prevent belt slip and keep tensions at all points above minimums recommended when belt is operating with a load.
If slip occurs under load, additional belt tension should be adjusting the take-up only enough to prevent slip from occurring under load, and when started with a load.

Seed Box Tote Dimensions

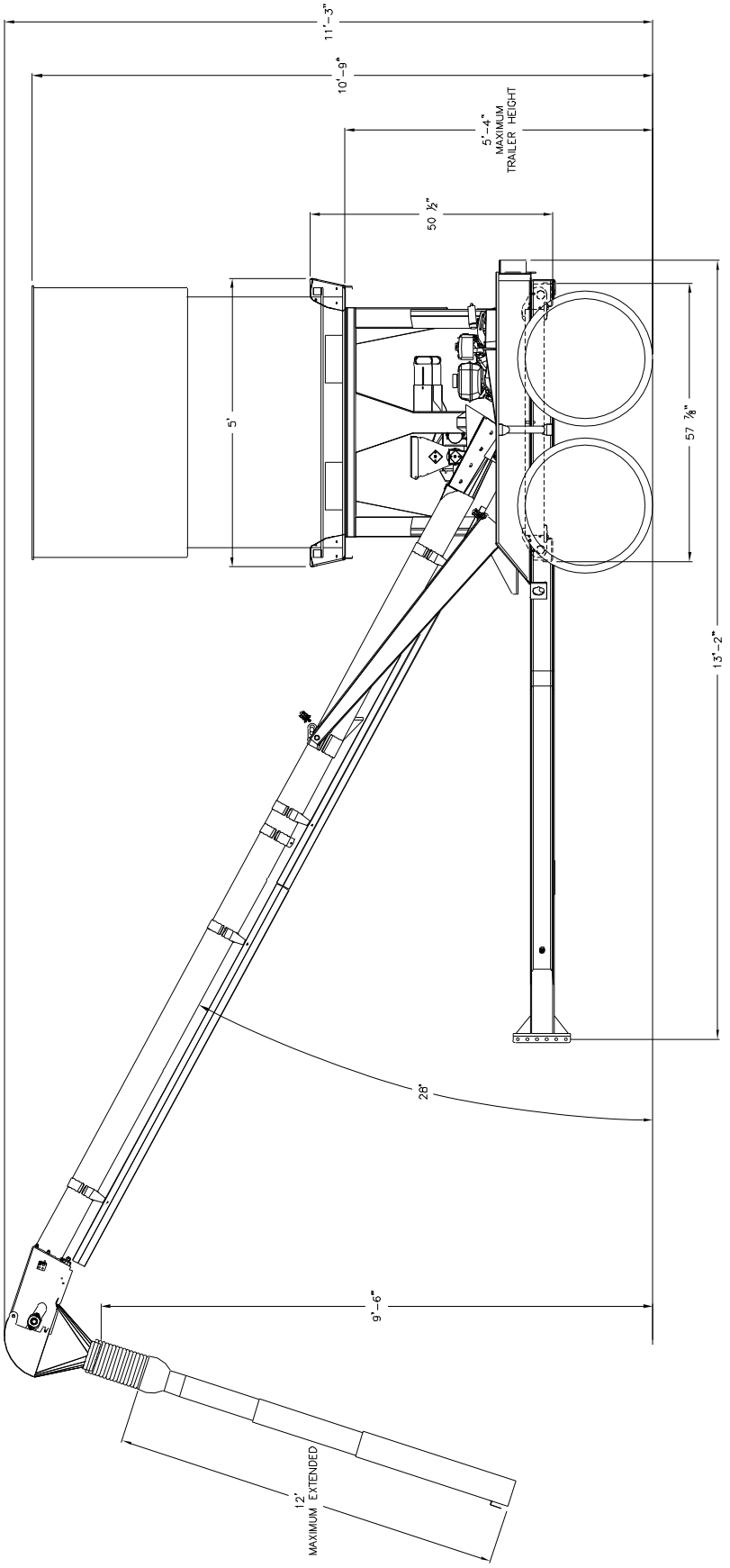

Seed Box Tote
Stand Assembly -Telescoping Tube
Gas Drive (Prior 2021)

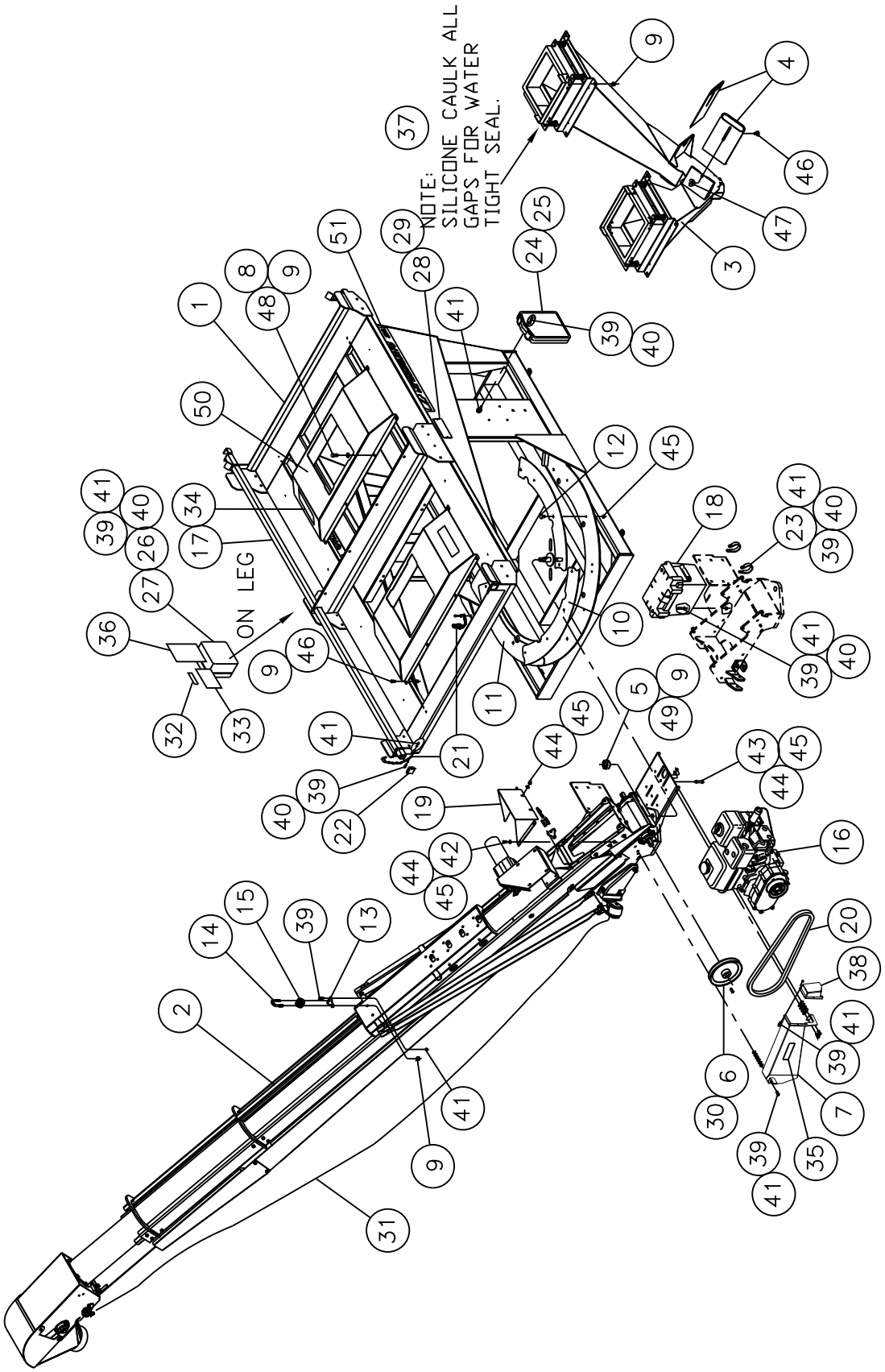

Seed Box Tote
Stand Assembly -Telescoping Tube
Gas Drive (Prior 2021)

#63164800

Item	Qty	Part No.	Description
1	1	975326	Tote Stand
2	1	879072	Telescoping Conveyor
3	1	878793	Spout Assembly
4	2	241133	Spout Gate
5	1	123448	Pivot Lock Collar
6	1	04255600	Sheave 1B 8 x 1 w/keyway
7	1	975464	Belt Guard
8	8	330894	Flat Washer 3/8"
9	21	330837	Nylock 3/8"
10	1	276337	Pivot Plate Center
11	2	276329	Pivot Plate Ends
12	12	01047000	Carriage Bolt 5/16" x 1"
13	2	242529	Insulator Bracket
14	2	03651700	Insulator
15	2	01034800	U-bolt 3/8" x 1 1/4" x 2 1/4"
16	1	63046700	Engine Assembly
17	2	975425	Load Bar
18	1	01429000	Battery Box
19	1	82099300	Conveyor Hopper
20	1	474304	V-Belt B-46
21	3	434456	Chain #4 x 17 links w/pin
22	2	03818200	Plug 1 1/4" Square
23	2	608596	Metal Loom Clamp 1/4"
24	1	607416	Manual Holder
25	1	04175600	Owners Manual
26	2	605659	Grommet
27	1	03895000	Remote Fob Box
28	1	00694000	Serial Plate
29	2	600577	Serial Plate Drive Screws
30	1	17375700	Key 1/4" x 1"
31	33'	01467000	Nylon Rope
32	1	03439700	Decal Patent #
33	1	05303300	Decal Cautions
34	2	05310800	Decal Debris Center Flow
35	1	05312400	Decal Shield Caution
36	1	05326400	Decal Tip-Over Warning
37	1/8	00843300	Silicone Caulk
38	1	976498	Belt Guard Rear
39	26	01057900	HHCS 1/4" x 3/4"
40	15	02016400	Flat Washer 1/4"
41	26	330522	Nylock 1/4"
42	4	01144500	HHCS 5/16" x 3/4"
43	4	335448	HHCS 5/16" x 1½"
44	10	330852	Flat Washer 5/16"
45	22	331611	Nylock 5/16"
46	10	330548	Carriage Bolt 3/8" x 3/4"
47	2	334847	Wing Nut 3/8"
48	8	01017300	HHCS 3/8" x 1"
49	1	330886	HHCS 3/8" x 3"
50	2	976902	Spout Assembly Mount

Seed Box Tote
Stand Assembly -Standard Tube
Gas Drive (Prior 2021)

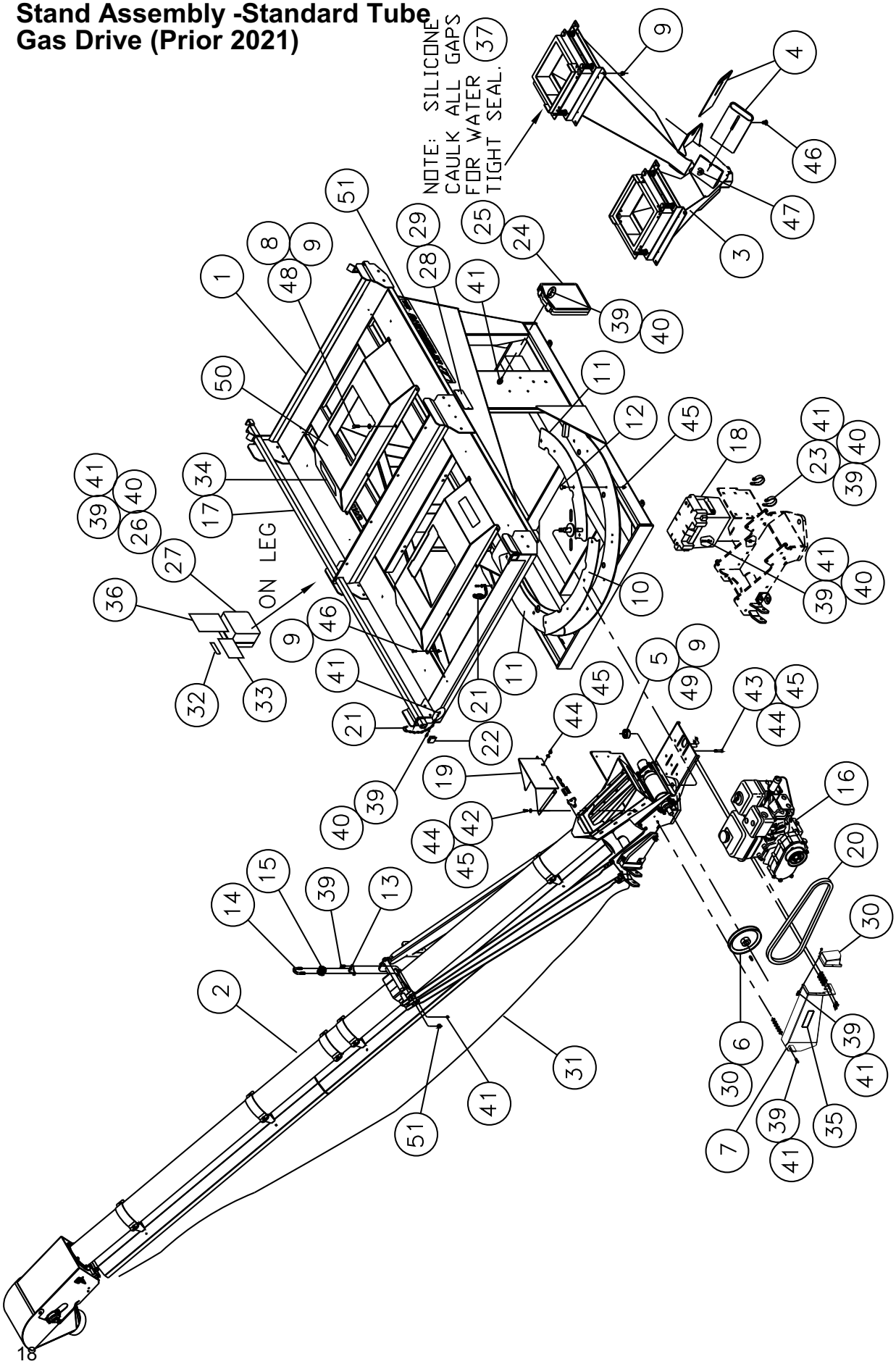

Seed Box Tote
Stand Assembly -Standard Tube
Gas Drive (Prior 2021)

#63171300

Item	Qty	Part No.	Description
1	1	975326	Tote Stand
2	1	879106	Conveyor Assembly 6"
3	1	878793	Spout Assembly
4	2	241133	Spout Gate
5	1	123448	Pivot Lock Collar
6	1	04255600	Sheave 1B 8 x 1 w/keyway
7	1	975464	Belt Guard
8	8	330894	Flat Washer 3/8"
9	21	330837	Nylock 3/8"
10	1	276337	Pivot Plate Center
11	2	276329	Pivot Plate Ends
12	12	01047000	Carriage Bolt 5/16" x 1"
13	2	242529	Insulator Bracket
14	2	03651700	Insulator
15	2	01034800	U-bolt 3/8" x 1 1/4" x 2 1/4"
16	1	63046700	Engine Assembly
17	2	975425	Load Bar
18	1	01429000	Battery Box
19	1	82099300	Conveyor Hopper
20	1	474304	V-Belt B-46
21	3	434456	Chain #4 x 17 links w/pin
22	2	03818200	Plug 1 1/4" Square
23	2	608596	Metal Loom Clamp 1/4"
24	1	607416	Manual Holder
25	1	04175600	Owners Manual
26	2	605659	Grommet
27	1	03895000	Remote Fob Box
28	1	00694000	Serial Plate
29	2	600577	Serial Plate Drive Screws
30	1	17375700	Key 1/4" x 1"
31	33'	01467000	Nylon Rope
32	1	03439700	Decal Patent #
33	1	05303300	Decal Cautions
34	2	05310800	Decal Debris Center Flow
35	1	05312400	Decal Shield Caution
36	1	05326400	Decal Tip-Over Warning
37	1/8	00843300	Silicone Caulk
38	1	976498	Belt Guard Rear
39	26	01057900	HHCS 1/4" x 3/4"
40	15	02016400	Flat Washer 1/4"
41	26	330522	Nylock 1/4"
42	4	01144500	HHCS 5/16" x 3/4"
43	4	335448	HHCS 5/16" x 1½"
44	10	330852	Flat Washer 5/16"
45	22	331611	Nylock 5/16"
46	10	330548	Carriage Bolt 3/8" x 3/4"
47	2	334847	Wing Nut 3/8"
48	8	01017300	HHCS 3/8" x 1"
49	1	330886	HHCS 3/8" x 3"
50	2	976902	Spout Assembly Mount

Seed Box Tote
Stand Assembly -Standard Tube
Electric Drive (Prior 2021)
#879643

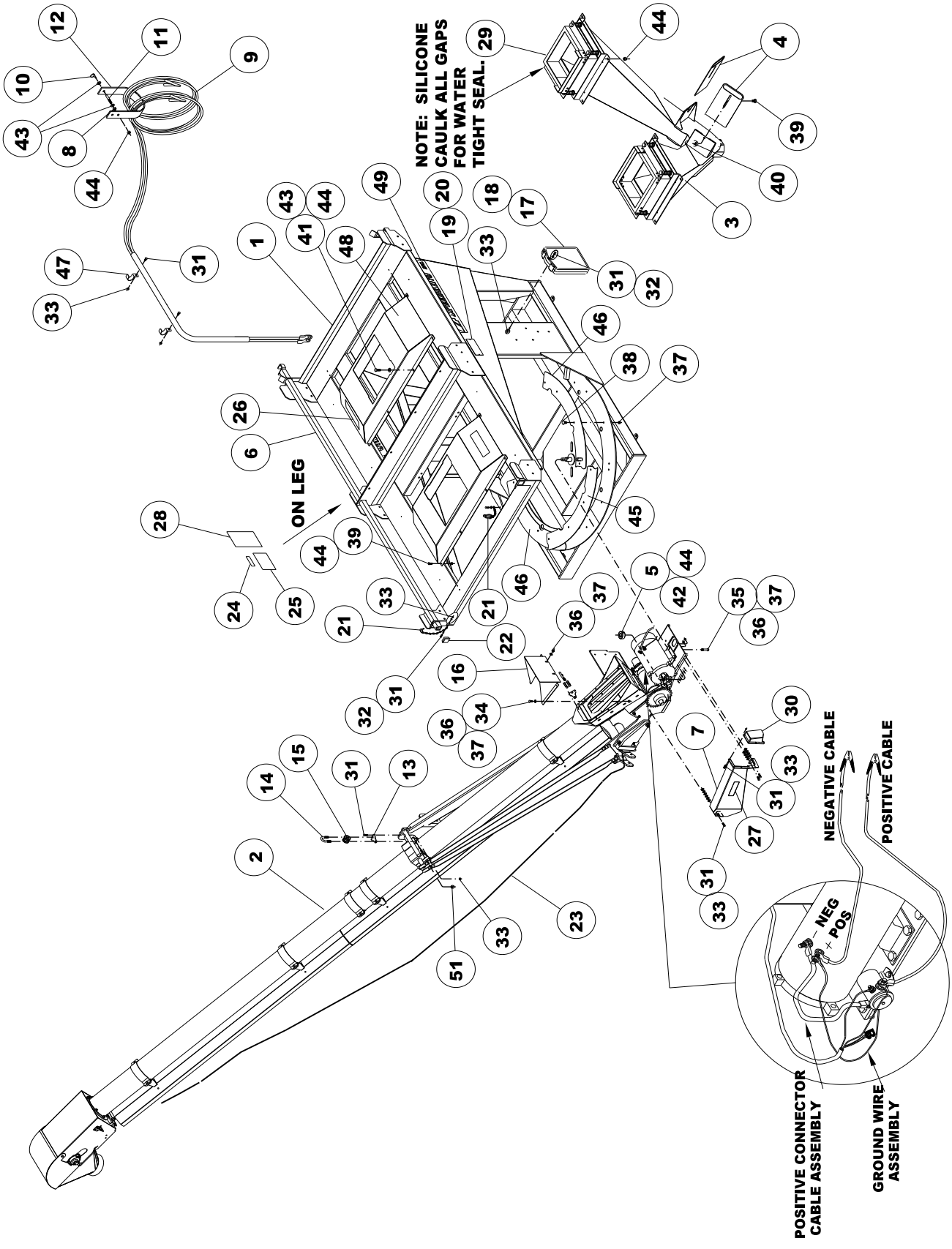

Seed Box Tote
Stand Assembly -Standard Tube
Electric Drive (Prior 2021)

#879643

Item	Qty	Part No.	Description
1	1	975326	Tote Stand
2	1	879635	Conveyor 6" Electric
3	1	878793	Spout Assembly
4	2	241133	Spout Gate
5	1	123448	Pivot Lock Collar
6	2	975425	Load Bar
7	1	976464	Belt Guard
8	1	330035	Hex Nut 3/8"
9	1	62629100	Battery Cable Assembly
10	1	330928	Klik Pin 3/16"
11	1	16864100	Pin 3/8" x 2½"
12	1	16865800	Cable Strap
13	2	242529	Insulator Bracket
14	2	03651700	Insulator
15	2	01034800	U-bolt 3/8" x 1 1/4" x 2 1/4"
16	1	82099300	Conveyor Hopper
17	1	607416	Manual Holder
18	1	04175600	Owners Manual
19	1	00694000	Serial Plate
20	2	600577	Serial Plate Drive Screws
21	3	434456	Chain #4 x 17 links w/pin
22	2	03818200	Plug 1 1/4" Square
23	33'	01467000	Nylon Rope
24	1	03439700	Decal Patent #
25	1	05303300	Decal Cautions
26	2	05310800	Decal Debris Center Flow
27	1	05312400	Decal Shield Caution
28	1	05326400	Decal Tip-Over Warning
29	1/8	00843300	Silicone Caulk
30	2	333633	HHCS 1/4" x 1 1/4"
31	20	01057900	HHCS 1/4" x 3/4"
32	7	02016400	Flat Washer 1/4"
33	20	330522	Nylock 1/4"
34	4	01144500	HHCS 5/16" x 3/4"
35	4	335448	HHCS 5/16" x 1½"
36	10	330852	Flat Washer 5/16"
37	22	331611	Nylock 5/16"
38	12	01047000	Carriage Bolt 5/16" x 1"
39	10	330548	Carriage Bolt 3/8" x 3/4"
40	2	334847	Wing Nut 3/8"
41	8	01017300	HHCS 3/8" x 1"
42	1	330886	HHCS 3/8" x 3"
43	10	330894	Flat Washer 3/8"
44	22	330837	Nylock 3/8"
45	1	276337	Pivot Plate Center
46	2	276329	Pivot Plate Ends
47	2	03102100	Conduit Strap 1"
48	2	976902	Spout Assembly Mount

Seed Box Tote
Stand Assembly -Telescoping Tube
Gas Drive
#63460000

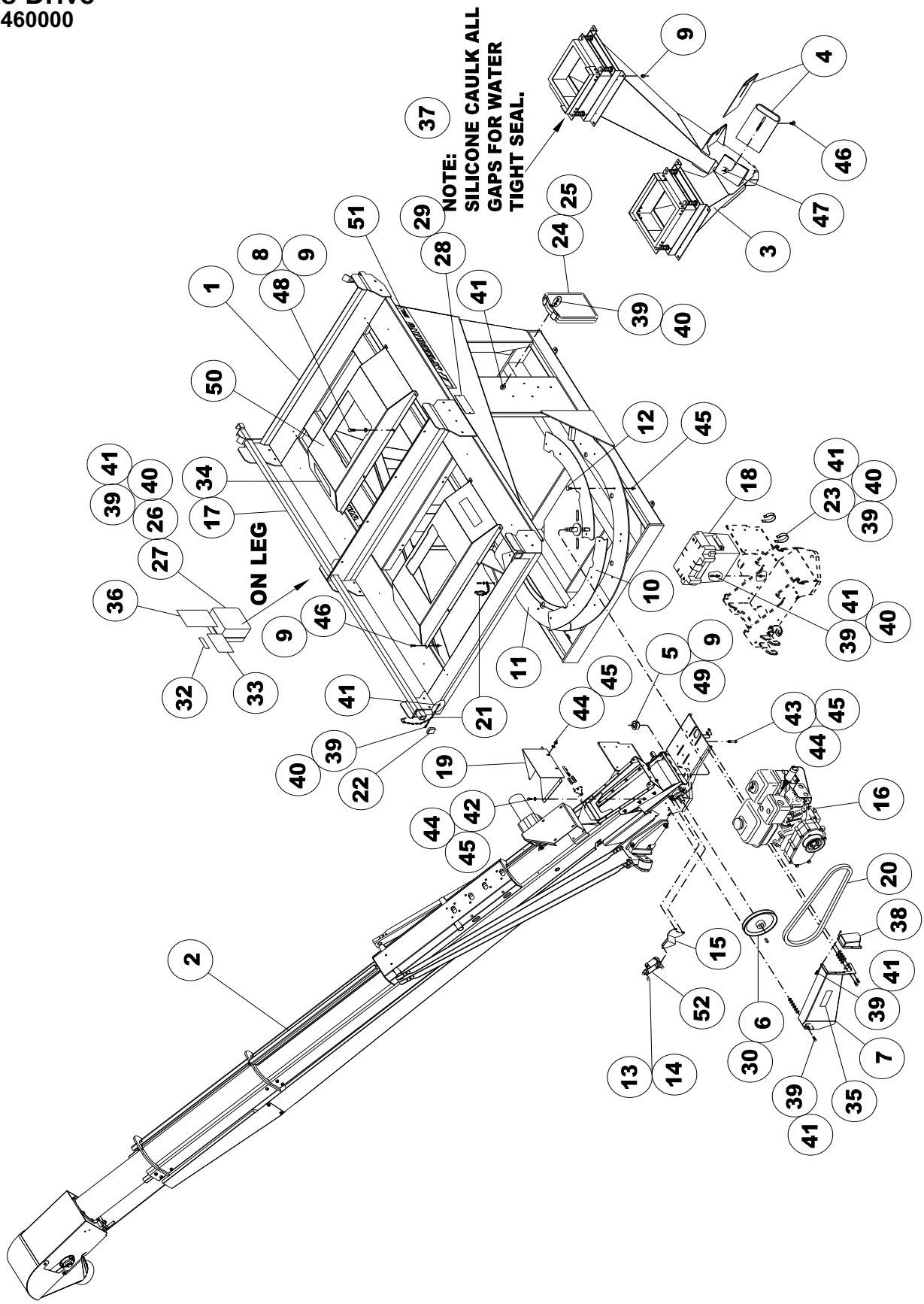

Seed Box Tote
Stand Assembly -Telescoping Tube
Gas Drive

#63460000

Item	Qty	Part No.	Description
1	1	975326	Tote Stand
2	1	883751	Telescoping Conveyor
3	1	878793	Spout Assembly
4	2	241133	Spout Gate
5	1	123448	Pivot Lock Collar
6	1	04255600	Sheave 1B 8 x 1 w/keyway
7	1	976464	Belt Guard
8	8	330894	Flat Washer 3/8"
9	20	330837	Nylock 3/8"
10	1	276337	Pivot Plate Center
11	2	276329	Pivot Plate Ends
12	12	01047000	Carriage Bolt 5/16" x 1"
13	2	04497400	Split Ring
14	2	04496600	Pin
15	1	83342600	2Box Actuator Base WA
16	1	63046700	Engine Assembly
17	2	975425	Load Bar
18	1	01429000	Battery Box
19	1	82099300	Conveyor Hopper
20	1	474304	V-Belt B-46
21	3	434456	Chain #4 x 17 links w/pin
22	2	03818200	Plug 1 1/4" Square
23	2	608596	Metal Loom Clamp 1/4"
24	1	607416	Manual Holder
25	1	04175600	Owners Manual

Item	Qty	Part No.	Description
26	2	605659	Grommet
27	1	03895000	Remote Fob Box
28	1	00694000	Serial Plate
29	2	600577	Serial Plate Drive Screws
30	1	17375700	Key 1/4" x 1"
31			
32	1	03439700	Decal Patent #
33	1	05303300	Decal Cautions
34	2	05310800	Decal Debris Center Flow
35	1	05312400	Decal Shield Caution
36	1	05326400	Decal Tip-Over Warning
37	1/8	00843300	Silicone Caulk
38	1	976498	Belt Guard Rear
39	25	01057900	HHCS 1/4" x 3/4"
40	15	02016400	Flat Washer 1/4"
41	25	330522	Nylock 1/4"
42	4	01144500	HHCS 5/16" x 3/4"
43	4	335448	HHCS 5/16" x 1½"
44	10	330852	Flat Washer 5/16"
45	22	331611	Nylock 5/16"
46	10	330548	Carriage Bolt 3/8" x 3/4"
47	2	334847	Wing Nut 3/8"
48	8	01017300	HHCS 3/8" x 1"
49	1	330886	HHCS 3/8" x 3"
50	1	976902	Spout Assembly Mount
51	1	615112	Decal Logo 4.813 x 28.5
52	1	883710	Actuator Assy 2020
53	1	00723700	Clamp Hose .875

Seed Box Tote
Stand Assembly -Standard Tube
Gas Hard Wire w/ Actuator
#63443600

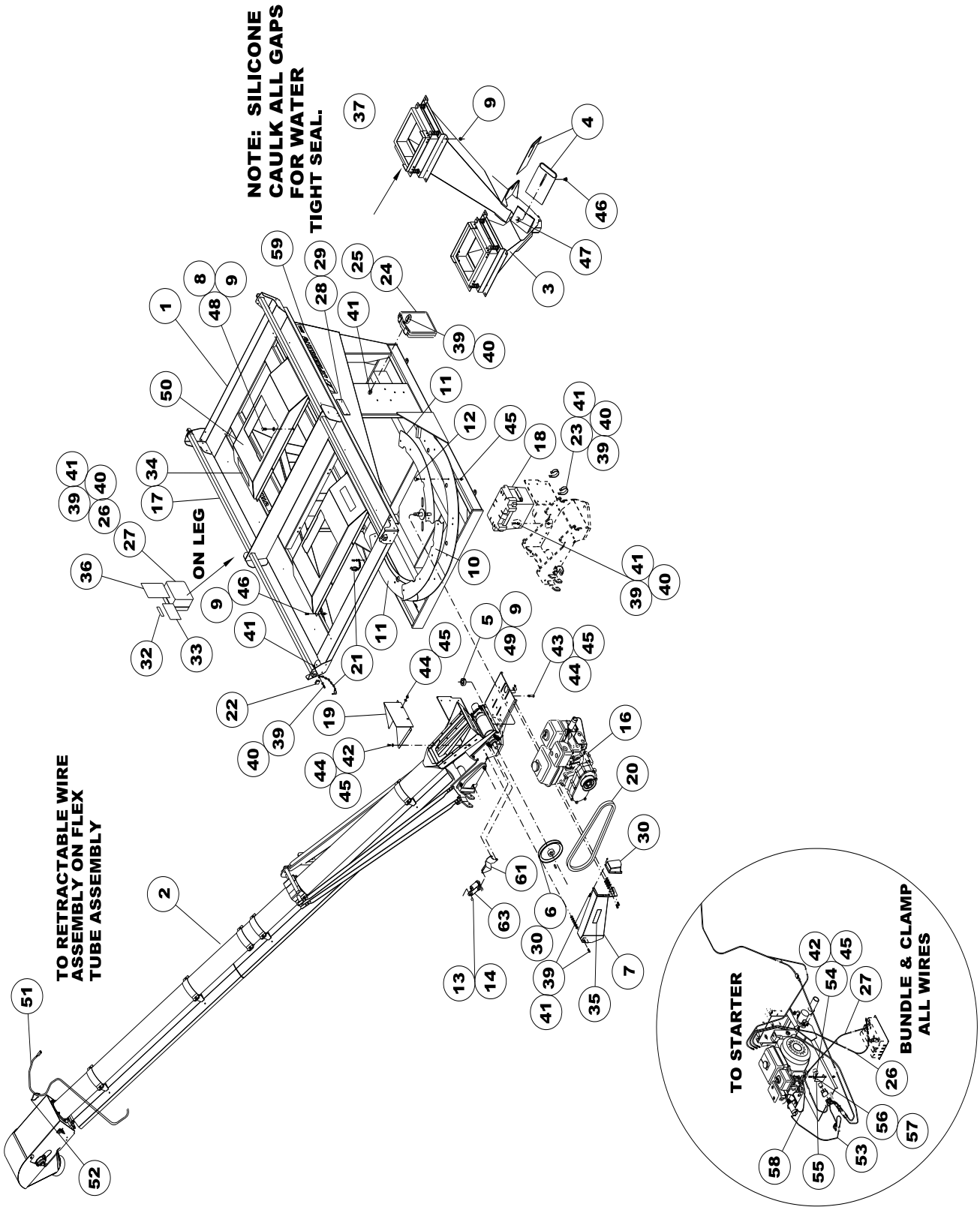

Seed Box Tote
Stand Assembly -Standard Tube
Gas Hard Wire w/ Actuator

#63443600

Item	Qty	Part No.	Description
1	1	975326	Tote Stand
2	1	883744	Conveyor Assembly 6"
3	1	878793	Spout Assembly
4	2	241133	Spout Gate
5	1	123448	Pivot Lock Collar
6	1	04255600	Sheave 1B 8 x 1 w/keyway
7	1	975464	Belt Guard
8	8	330894	Flat Washer 3/8"
9	21	330837	Nylock 3/8"
10	1	276337	Pivot Plate Center
11	2	276329	Pivot Plate Ends
12	12	01047000	Carriage Bolt 5/16" x 1"
13	2	04496600	Pin
14	2	04497400	Split Ring
15	2	01034800	U-bolt 3/8" x 1 1/4" x 2 1/4"
16	1	63046700	Engine Assembly
17	2	975425	Load Bar
18	1	01429000	Battery Box
19	1	82099300	Conveyor Hopper
20	1	474304	V-Belt B-46
21	3	434456	Chain #4 x 17 links w/pin
22	2	03818200	Plug 1 1/4" Square
23	2	608596	Metal Loom Clamp 1/4"
24	1	607416	Manual Holder
25	1	04175600	Owners Manual
26	1	63149900	Battery Cable Positive
27	1	63150700	Battery Cable Negative
28	1	00694000	Serial Plate
29	2	600577	Serial Plate Drive Screws
30	1	17375700	Key 1/4" x 1"
31			
32	1	03439700	Decal Patent #
33	1	05303300	Decal Cautions
34	2	05310800	Decal Debris Center Flow
35	1	05312400	Decal Shield Caution
36	1	05326400	Decal Tip-Over Warning
37	1/8	00843300	Silicone Caulk
38	1	976498	Belt Guard Rear
39	26	01057900	HHCS 1/4" x 3/4"
40	15	02016400	Flat Washer 1/4"
41	26	330522	Nylock 1/4"
42	4	01144500	HHCS 5/16" x 3/4"
43	4	335448	HHCS 5/16" x 1½"
44	10	330852	Flat Washer 5/16"
45	22	331611	Nylock 5/16"
46	10	330548	Carriage Bolt 3/8" x 3/4"
47	2	334847	Wing Nut 3/8"
48	8	01017300	HHCS 3/8" x 1"
49	1	330886	HHCS 3/8" x 3"
50	2	976902	Spout Assembly Mount
51	1	63400600	Tube Assy Mount Wa
52	2	571299	Cable Tie
53	1	611467	Gas Amp Reducer Wire Assy
54	1	00723700	Hose Clamp .875
55	1	30826200	Mounting Bracket
56	1	02690600	Screw #10-24 x 1.250 Pan Head
57	1	333393	Lock Nut #10
58	1	62774500	Solenoid Ground Cable
59	2	615112	Decal Logo 4.813 x 28.5
60			
61	1	83342600	2Box Actuator
62			
63	1	883710	Actuator Assy
64	1	616532	Hardwire Actuator Wire Assy

Seed Box Tote
Stand Assembly -Standard Tube
Gas Remote w/ Actuator
#63458400

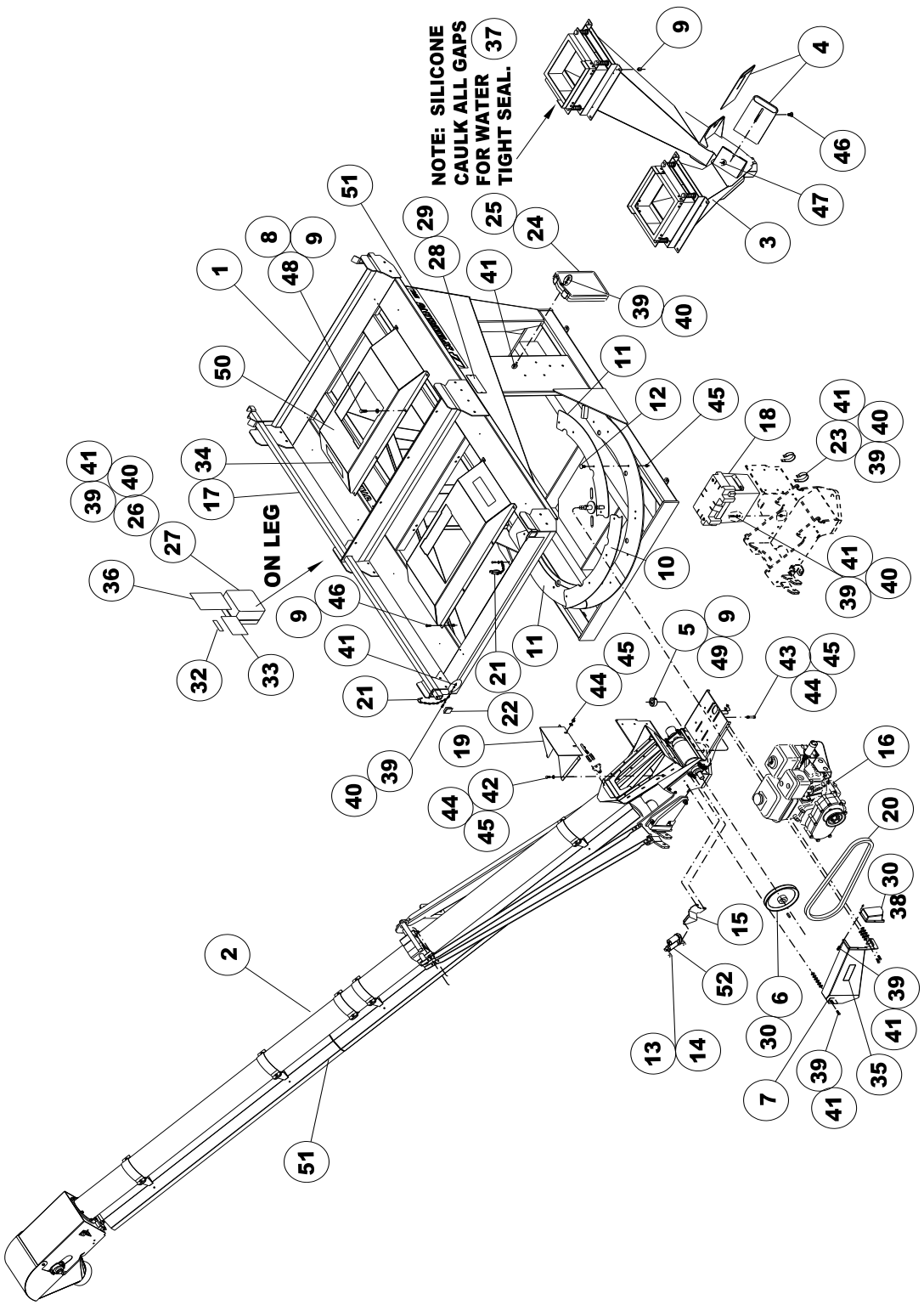

Seed Box Tote
Stand Assembly -Standard Tube
Gas Remote w/ Actuator

#63458400

Item	Qty	Part No.	Description
1	1	975326	Tote Stand
2	1	883744	Head/Tail/Tube
3	1	878793	Spout Assembly
4	2	241133	Spout Gate
5	1	123448	Pivot Lock Collar
6	1	04255600	Sheave 1B 8 x 1 w/keyway
7	1	975464	Belt Guard
8	8	330894	Flat Washer 3/8"
9	21	330837	Nylock 3/8"
10	1	276337	Pivot Plate Center
11	2	276329	Pivot Plate Ends
12	12	01047000	Carriage Bolt 5/16" x 1"
13	2	04497400	Split Ring
14	2	04496600	Pin
15	1	83342600	2Box Actuator Base WA
16	1	63046700	Engine Assembly
17	2	975425	Load Bar
18	1	01429000	Battery Box
19	1	82099300	Conveyor Hopper
20	1	474304	V-Belt B-46
21	3	434456	Chain #4 x 17 links w/pin
22	2	03818200	Plug 1 1/4" Square
23	2	608596	Metal Loom Clamp 1/4"
24	1	607416	Manual Holder
25	1	04175600	Owners Manual

Item	Qty	Part No.	Description
26	2	605659	Grommet
27	1	03895000	Remote Fob Box
28	1	00694000	Serial Plate
29	2	600577	Serial Plate Drive Screws
30	1	17375700	Key 1/4" x 1"
31			
32	1	03439700	Decal Patent #
33	1	05303300	Decal Cautions
34	2	05310800	Decal Debris Center Flow
35	1	05312400	Decal Shield Caution
36	1	05326400	Decal Tip-Over Warning
37	1/8	00843300	Silicone Caulk
38	1	976498	Belt Guard Rear
39	26	01057900	HHCS 1/4" x 3/4"
40	15	02016400	Flat Washer 1/4"
41	26	330522	Nylock 1/4"
42	4	01144500	HHCS 5/16" x 3/4"
43	4	335448	HHCS 5/16" x 1½"
44	10	330852	Flat Washer 5/16"
45	22	331611	Nylock 5/16"
46	10	330548	Carriage Bolt 3/8" x 3/4"
47	2	334847	Wing Nut 3/8"
48	8	01017300	HHCS 3/8" x 1"
49	1	330886	HHCS 3/8" x 3"
50	2	976902	Spout Assembly Mount
51	2	615112	Decal Logo 4.813 x 28.50
52	1	883710	Actuator Assy 2020
53	1	00723700	Clamp Hose .875

Seed Box Tote
Stand Assembly -Standard Tube
Electric w/ Actuator
#883868

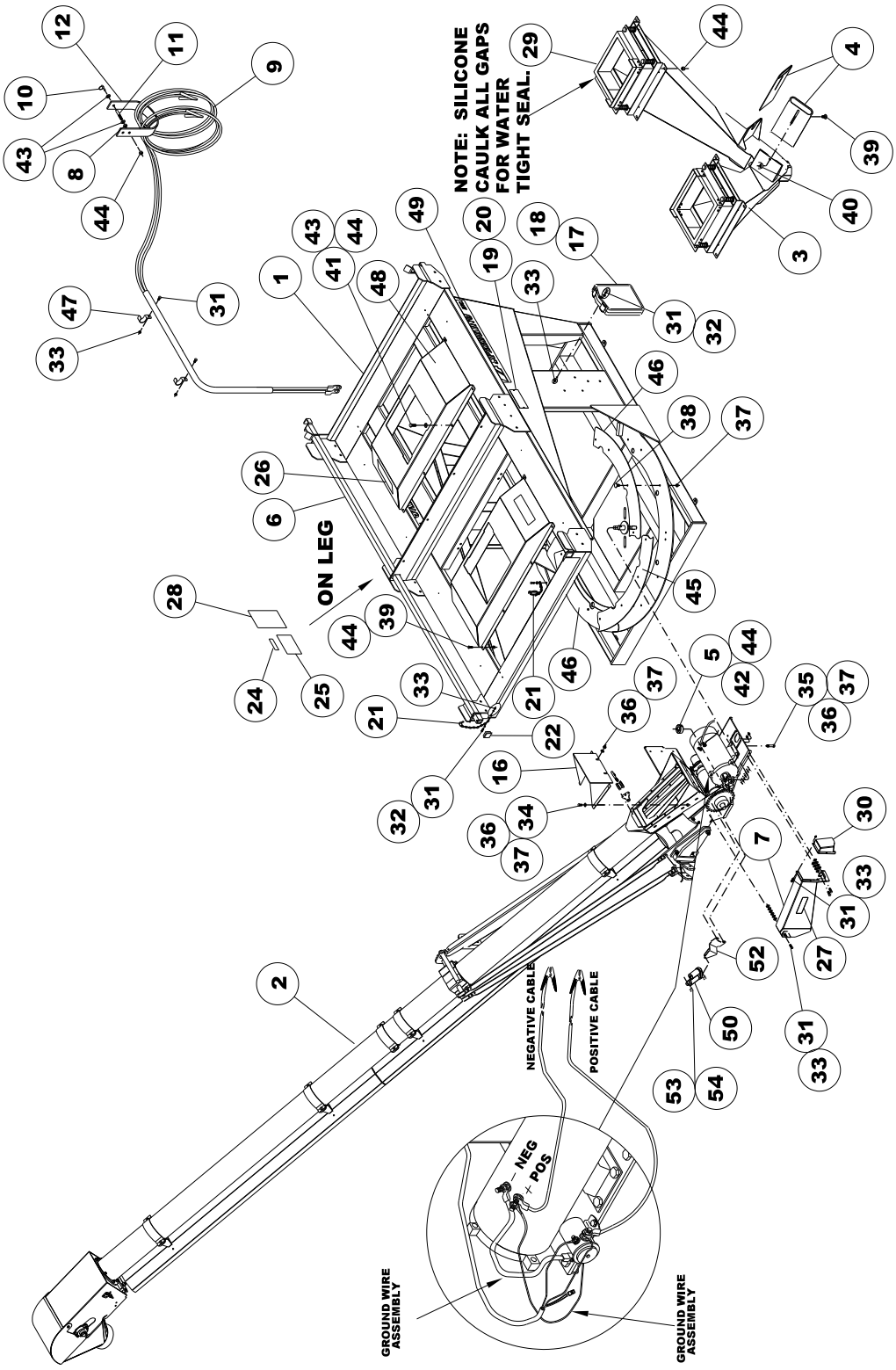

Seed Box Tote
Stand Assembly -Standard Tube
Electric w/ Actuator

#883868

Item	Qty	Part No.	Description
1	1	975326	Tote Stand
2	1	883843	Conv 6"Head/Tail/Tube Elec W/Actuator
3	1	878793	Spout Assembly
4	2	241133	Spout Gate
5	1	123448	Pivot Lock Collar
6	1	975425	Load Bar
7	1	975464	Belt Guard
8	1	330035	Hex Nut .375
9	1	62629100	Battery Cable Assy
10	1	330928	Klik Pin .188
11	1	16864100	Pin .375 x 2.5
12	1	16865800	Cable Strap
13	1	616532	Hardwire Actuator Wire Assy
14			
15			
16	1	82099300	Conveyor Hopper
17	1	607416	Manual Holder
18	1	04175600	Owners Manual
19	1	00694000	Serial Plate
20	2	600577	Serial Plate Drive Screws
21	3	434456	Chain #4 x 17 links w/pin
22	2	03818200	Plug 1 1/4" Square
23			
24	1	03439700	Decal Patent #

Item	Qty	Part No.	Description
25	1	05303300	Decal Cautions
26	2	05310800	Decal Debris Center Flow
27	1	05312400	Decal Shield Caution
28	1	05326400	Decal Tip-Over Warning
29	1/8	00843300	Silicone Caulk
30	1	976498	Belt Guard Rear WA
31	20	01057900	HHCS 1/4" x 3/4"
32	7	02016400	Flat Washer 1/4"
33	20	330522	Nylock 1/4"
34	4	01144500	HHCS 5/16" x 3/4"
35	4	335448	HHCS 5/16" x 1½"
36	10	330852	Flat Washer 5/16"
37	22	331611	Nylock 5/16"
38	12	01047000	Carriage Bolt 5/16" x 1"
39	10	330548	Carriage Bolt 3/8" x 3/4"
40	2	334847	Wing Nut 3/8"
41	8	01017300	HHCS 3/8" x 1"
42	1	330886	HHCS 3/8" x 3"
43	10	330894	Flat Washer 3/8"
44	22	330837	Nylock 3/8"
45	1	276337	Pivot Plate Center
46	2	276329	Pivot Plate Ends
47	2	03102100	Conduit Strap 1"
48	2	976902	Spout Assembly Mount
49	2	615112	Decal Logo 4.813 x 28.5
50	1	883710	Actuator Assy
51			
52	1	88342600	2Box Actuator Base WA
53	2	04497400	Split Ring
54	2	04496600	Pin

Seed Box Tote
Standard Tube
Gas Drive
#879106

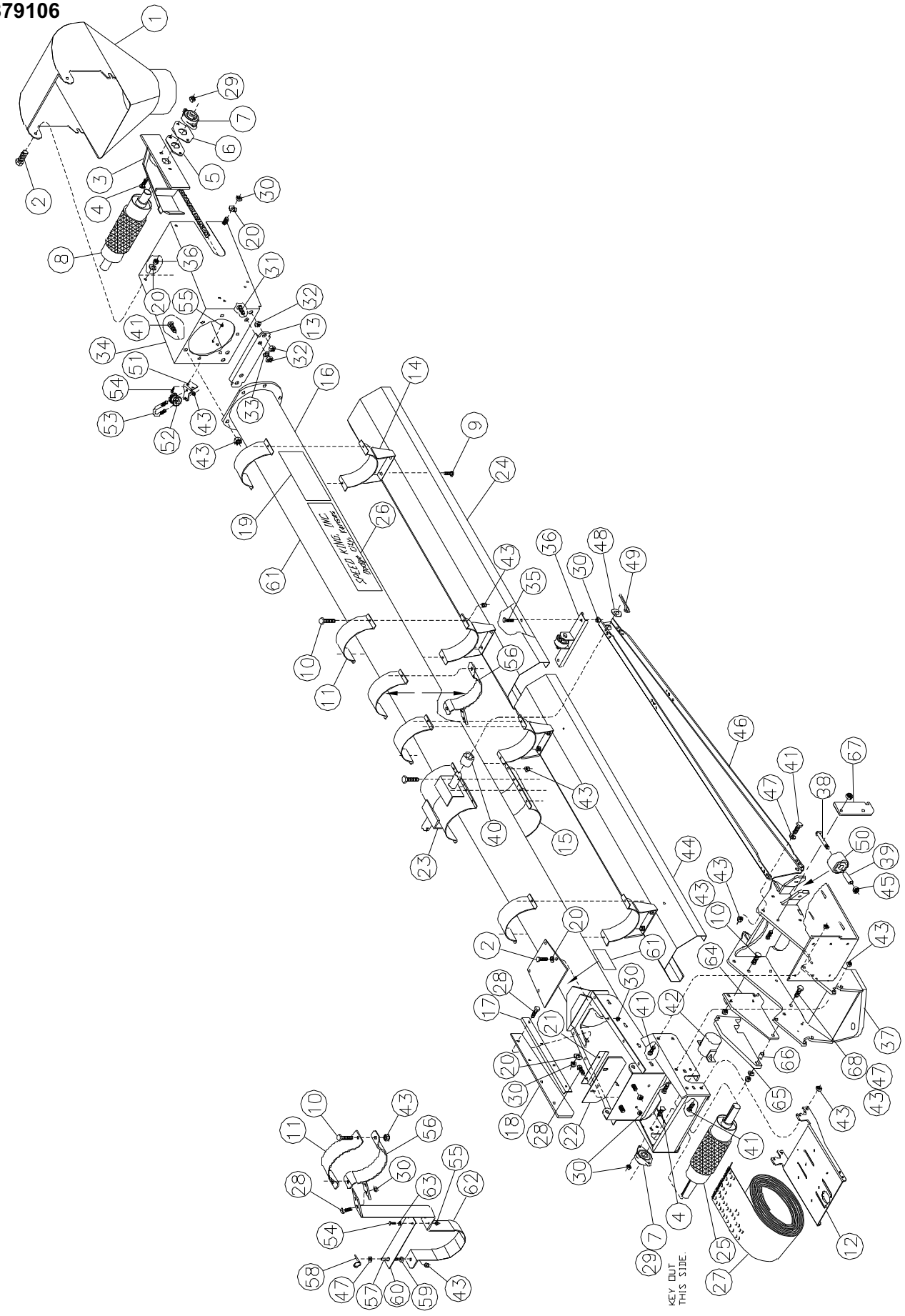

Seed Box Tote
Standard Tube
Gas Drive

#879106

Item	Qty	Part No.	Description
1	1	81842700	Spout
2	6	01144500	HHCS 5/16" x 3/4"
3	1	961714	Take-up Bar Right
	1	961565	Take-up Bar Left
4	8	01261700	Carriage Bolt 5/16" x 1½"
5	2	151746	Head Bearing Slide Inner
6	2	151753	Head Bearing Slide Outer
7	4	03001500	Bearing 1" Flange
8	1	62212600	Head Roller
9	8	334409	Carriage Bolt 5/16" x 3/4"
10	29	01158500	HHCS 3/8" x 1 1/4"
11	5	16577910	Half Band 6 x 2
12	1	241752	Motor Mount Plate
13	1	16497000	Adjustment Mount Plate
14	4	82489600	Belt Cover Mount
15	2	16578710	Half Band 6 x 4
16	1	82421900	Tail
17	2	16427700	Skirt Board Plate
18	2	16431900	Skirt Board Back
19	1	606335	Decal Belt Training
20	16	330852	Flat Washer 5/16"
21	1	16428500	Skirt Board Plate
22	1	16432700	Skirt Board Back
23	1	976829	Tube Transport Lock
24	1	20489100	Belt Guard
25	1	62705900	Tail Roller
26	2	01202100	Decal “Speed King”
27	1	62850300	Belt 8" x 35'-7 7/8"
28	10	01010800	HHCS 5/16" x 1"
29	2	01162700	Zerk 1/4-28 x 45 Deg
30	37	331611	Nylock 5/16"
31	2	335240	HHCS ½" x 1 3/4"
32	6	330134	Hex Nut ½"
33	2	330142	Lock Washer ½"
34	1	82353400	Head Frame
35	2	333542	HHCS 5/16" x 5/8"
36	1	62751300	Roller Base
37	1	975342	Feed Tube Mount
38	2	333310	Carriage Bolt ½" x 3½"
39	2	30131700	Roller Bushing 2 1/16"
40	2	157206	Spacer Bushing
41	22	01017300	HHCS 3/8" x 1"
42	1	82502600	Shaft End Guard
43	48	330837	Nylock 3/8"
44	1	20531000	Belt Guard Plate
45	2	331363	Nylock ½"
46	2	31143100	Side Support Plate
47	7	330894	Flat Washer 3/8"
48	2	330159	Flat Washer ½"
49	2	02054500	Cotter Pin 1/4" x 2"
50	2	60967700	Outside Roller
51	1	243642	Insulator Mount Plate
52	1	03651700	Insulator
53	1	01034800	U-bolt 3/8" x 1 1/4" x 2 1/4"
54	4	01057900	HHCS 1/4" x 3/4"
55	2	330522	Nylock 1/4"
56	1	81865800	Half Band Guard
57	1	16864100	Spout Pin Shaft
58	1	330928	Klik Pin 3/16"
59	1	330035	Hex Nut 3/8"
60	1	614321	Spout Strap
61	1	05328000	Decal “Safety Hazard”
62	1	244368	Flexible Spout Hanger
63	4	02016400	Flat Washer 1/4"
64	1	82972100	Stop
65	1	31142300	Detent Arm
66	1	31141500	Stop Bushing
67	1	31138100	Side Plate Stop
68	1	335877	HhCS 3/8" x 1 3/4"

Seed Box Tote
Standard Tube
Electric Drive
#879635

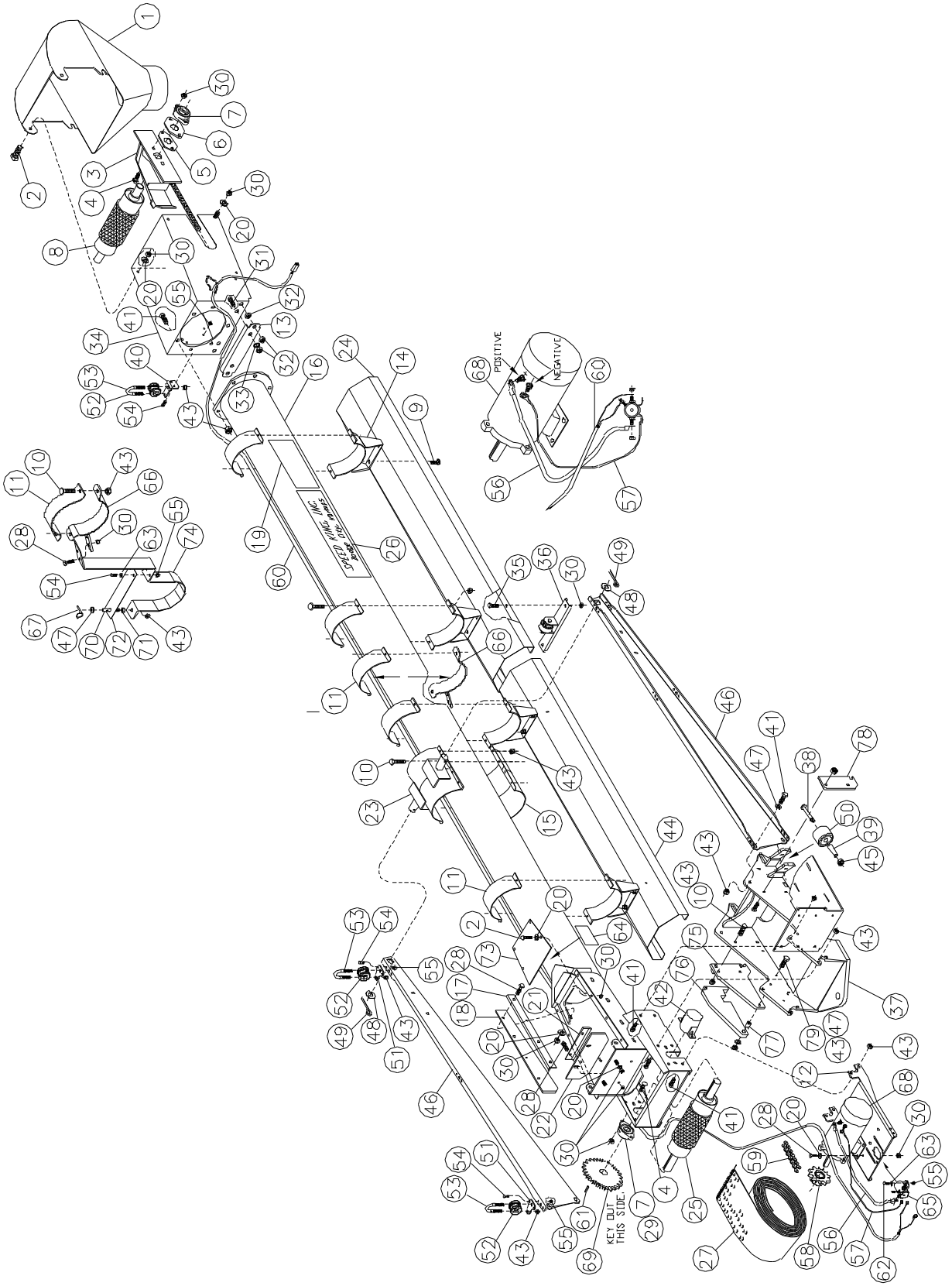

Seed Box Tote
Standard Tube
Electric Drive

#879635

Item	Qty	Part No.	Description
1	1	81842700	Spout
2	6	01144500	HHCS 5/16" x 3/4"
3	1	961714	Take-up Bar Right
	1	961565	Take-up Bar Left
4	8	01261700	Carriage Bolt 5/16" x 1½"
5	2	151746	Head Bearing Slide Inner
6	2	151753	Head Bearing Slide Outer
7	4	03001500	Bearing 1" Flange
8	1	62212600	Head Roller
9	8	334409	Carriage Bolt 5/16" x 3/4"
10	22	01158500	HHCS 3/8" x 1 1/4"
11	5	16577910	Half Band 6 x 2
12	1	241752	Motor Mount Plate
13	1	16497000	Adjustment Mount Plate
14	4	82489600	Belt Cover Mount
15	2	16578710	Half Band 6 x 4
16	1	82421900	Tail
17	2	16427700	Skirt Board Plate
18	2	16431900	Skirt Board Back
19	1	606335	Decal Belt Training
20	23	330852	Flat Washer 5/16"
21	1	16428500	Skirt Board Plate
22	1	16432700	Skirt Board Back
23	1	976829	Tube Transport Lock
24	1	20489100	Belt Guard
25	1	62705900	Tail Roller
26	2	01202100	Decal “Speed King”
27	1	62850300	Belt 8" x 35'-7 7/8"
28	15	01010800	HHCS 5/16" x 1"
29	2	01162700	Zerk 1/4-28 x 45 Deg
30	36	331611	Nylock 5/16"
31	2	335240	HHCS ½" x 1 3/4"
32	6	330134	Hex Nut ½"
33	2	330142	Lock Washer ½"
34	1	82353400	Head Frame
35	2	333542	HHCS 5/16" x 5/8"
36	1	62751300	Roller Base
37	1	975342	Feed Tube Mount
38	2	333310	Carriage Bolt ½" x 3½"
39	2	30131700	Roller Bushing 2 1/16"
40	1	243642	Insulator Mount Plate
41	26	01017300	HHCS 3/8" x 1"
42	1	82502600	Shaft End Guard
43	61	330837	Nylock 3/8"
44	1	20531000	Belt Guard Plate
45	2	331363	Nylock ½"
46	2	31143100	Side Support Plate
47	7	330894	Flat Washer 3/8"
48	2	335786	Flat Washer ½" SAE
49	2	02054500	Cotter Pin 1/4" x 2"
50	2	60967700	Outside Roller
51	2	242529	Insulator Mount Plate
52	3	03651700	Insulator
53	3	01034800	U-bolt 3/8" x 1 1/4" x 2 1/4"
54	6	01057900	HHCS 1/4" x 3/4"
55	8	330522	Nylock 1/4"
56	1	62377700	Positive Connector Cable
57	1	62378500	Ground Wire
58	1	03722600	Sprocket #40 11 Tooth
59	1	63196000	Chain #40 x 66 Links
60	1	62379300	Tube Cable
61	1	17375700	Key 1/4" x 1"
62	2	331835	HHCS 1/4" x 1"
63	2	02016400	Flat Washer 1/4"
64	1	05328000	Decal “Safety Hazard”
65	1	03251600	Solenoid Switch
66	1	81865800	Half Band Guard
67	1	330928	Klik Pin 3/16"
68	1	03648300	Electric Motor 12V 1HP
69	1	84723600	Sprocket #40 36 Tooth
70	1	16864100	Spout Pin Shaft
71	1	330035	Hex Nut 3/8"
72	1	614321	Spout Strap
73	1	614032	Neoprene Cover
74	1	244368	Flexible Spout Hanger
75	1	82972100	Stop
76	1	31142300	Detent Arm
77	1	31141500	Stop Plate Bushing
78	1	31138100	Stop Plate
79	1	335729	HHCS 3/8" x 2 1/4"

Seed Box Tote
Standard Tube
Gas Remote
#883744

Seed Box Tote
Standard Tube
Gas Remote

#883744

Item	Qty	Part No.	Description
1	1	63198600	Spout Assy W/ Lining
2	6	01144500	HHCS 5/16" x 3/4"
3	1	961714	Take-up Bar Right
	1	961565	Take-up Bar Left
4	8	01261700	Carriage Bolt 5/16" x 1½"
5	2	151746	Head Bearing Slide Inner
6	2	151753	Head Bearing Slide Outer
7	4	03001500	Bearing 1" Flange
8	1	62212600	Head Roller
9	8	334409	Carriage Bolt 5/16" x 3/4"
10	22	01158500	HHCS 3/8" x 1 1/4"
11	5	16577910	Half Band 6 x 2
12	1	241752	Motor Mount Plate
13	1	16497000	Adjustment Mount Plate
14	4	82489600	Belt Cover Mount
15	2	16578710	Half Band 6 x 4
16	1	82421900	Tail
17	2	16427700	Skirt Board Plate
18	2	16431900	Skirt Board Back
19	1	606335	Decal Belt Training
20	23	330852	Flat Washer 5/16"
21	1	16428500	Skirt Board Plate
22	1	16432700	Skirt Board Back
23	1	976829	Tube Transport Lock
24	1	20489100	Belt Guard
25	1	62705900	Tail Roller
26	2	01202100	Decal “Speed King”
27	1	62850300	Belt 8" x 35'-7 7/8"
28	15	01010800	HHCS 5/16" x 1"
29	2	01162700	Zerk 1/4-28 x 45 Deg
30	36	331611	Nylock 5/16"
31	2	335240	HHCS ½" x 1 3/4"
32	6	330134	Hex Nut ½"
33	2	330142	Lock Washer ½"
34	1	82353400	Head Frame
35	2	333542	HHCS 5/16" x 5/8"
36	1	62751300	Roller Base
37	1	975342	Feed Tube Mount
38	2	333310	Carriage Bolt ½" x 3½"
39	2	30131700	Roller Bushing 2 1/16"
40	1	157206	Spacer Bushing 1.250
41	22	01017300	HHCS 3/8" x 1"
42	1	82502600	Shaft End Guard
43	50	330837	Nylock 3/8"
44	1	20531000	Belt Guard Plate
45	2	331363	Nylock ½"
46	2	31143100	Side Support Plate
47	7	330894	Flat Washer 3/8"
48	2	335786	Flat Washer ½" SAE
49	2	02054500	Cotter Pin 1/4" x 2"
50	2	60967700	Outside Roller
51	1	83343400	2Box Actuator WA
52			
53			
54	3	01057900	HHCS 1/4" x 3/4"
55	2	330522	Nylock 1/4"
56	1	81865800	Half Band Guard WA
57	1	16864100	Spout Pin Shaft
58	1	330928	Klik Pin .188
59	1	330035	Nut .375
60	1	614321	Spout Trap
61	1	05328000	Decal Safety Hazard
62	1	244368	Flexible Spout Hanger
63	4	02016400	Flat Washer 1/4"
64	1	82972100	Stop
65	1	31142300	Detent Arm
66	1	32856800	Tube-rd .625 x .109 x .875
67	1	31138100	Plate .375 x 2.625 x 6.563
68	1	335729	HHCS 3/8" x 2 1/4"
69	1	614032	Neoprene Cover
70	1	246389	Plate .250 x 2.500 x 12.482
71	4	330654	Carriage Bolt .375 x 1.00

Seed Box Tote
Standard Tube
Electric W/ Actuator
#883843

Seed Box Tote
Standard Tube
Electric W/ Actuator

#883843

Item	Qty	Part No.	Description
1	1	63198600	Spout Assy W/ Lining
2	6	01144500	HHCS 5/16" x 3/4"
3	1	961714	Take-up Bar Right
	1	961565	Take-up Bar Left
4	8	01261700	Carriage Bolt 5/16" x 1½"
5	2	151746	Head Bearing Slide Inner
6	2	151753	Head Bearing Slide Outer
7	4	03001500	Bearing 1" Flange
8	1	62212600	Head Roller
9	8	334409	Carriage Bolt 5/16" x 3/4"
10	22	01158500	HHCS 3/8" x 1 1/4"
11	5	16577910	Half Band 6 x 2
12	1	241752	Motor Mount Plate
13	1	16497000	Adjustment Mount Plate
14	4	82489600	Belt Cover Mount
15	2	16578710	Half Band 6 x 4
16	1	82421900	Tail
17	2	16427700	Skirt Board Plate
18	2	16431900	Skirt Board Back
19	1	606335	Decal Belt Training
20	23	330852	Flat Washer 5/16"
21	1	16428500	Skirt Board Plate
22	1	16432700	Skirt Board Back
23	1	976829	Tube Transport Lock
24	1	20489100	Belt Guard
25	1	62705900	Tail Roller
26	2	01202100	Decal “Speed King”
27	1	62850300	Belt 8" x 35'-7 7/8"
28	15	01010800	HHCS 5/16" x 1"
29	2	01162700	Zerk 1/4-28 x 45 Deg
30	36	331611	Nylock 5/16"
31	2	335240	HHCS ½" x 1 3/4"
32	6	330134	Hex Nut ½"
33	2	330142	Lock Washer ½"
34	1	82353400	Head Frame
35	2	333542	HHCS 5/16" x 5/8"
36	1	62751300	Roller Base
37	1	975342	Feed Tube Mount
38	2	333310	Carriage Bolt ½" x 3½"
39	2	30131700	Roller Bushing 2 1/16"

Item	Qty	Part No.	Description
40			
41	26	01017300	HHCS 3/8" x 1"
42	1	82502600	Shaft End Guard
43	55	330837	Nylock 3/8"
44	1	20531000	Belt Guard Plate
45	2	331363	Nylock ½"
46	2	31143100	Side Support Plate
47	7	330894	Flat Washer 3/8"
48	2	335786	Flat Washer ½" SAE
49	2	02054500	Cotter Pin 1/4" x 2"
50	2	60967700	Outside Roller
51	1	83343400	2Box Actuator WA
52			
53			
54			
55	8	330522	Nylock 1/4"
56	1	62377700	Positive Conn Cable Assy
57	1	62378500	Ground Wire Assy
58	1	03722600	Sprocket #40 11Tooth
59	1	63196000	Chain #40 x 66 Links
60	1	62379300	Tube Cable Assy
61	1	17375700	Key .250 x .250 x 1
62	2	331835	HHCS .250 x 1
63	2	02016400	Flat Washer 1/4"
64	1	05328000	Decal Safety Hazard
65	1	03251600	Solenoid Switch
66	1	81865800	Half Band Guard WA
67	1	330928	Klik Pin .188
68	1	03648300	Electric Motor 12V 1HP W/ Key
69	1	84723600	Sprocket WA #40 36T
70	1	16864100	Spout Pin Shaft
71	1	330035	Nut .375 Hex
72	1	614321	Spout Strap
73	1	614032	Neoprene Cover
74	1	244368	3pc Flexible Hanger
75	1	82972100	Stop
76	1	31142300	Detent Arm
77	1	32856800	Tube .625 x .109 x .875
78	1	31138100	Plate .375 x 2.625 x 6.563
79	1	335729	HHCS 3/8" x 2 1/4"
80	2	157206	Spacer Bushing
81	1	246389	Plate .250 x 2.500 x 12.482
82	4	330654	Carriage Bolt .375 x 1.00

Seed Box Tote
Telescoping Tube
Gas W/ Actuator
#883751

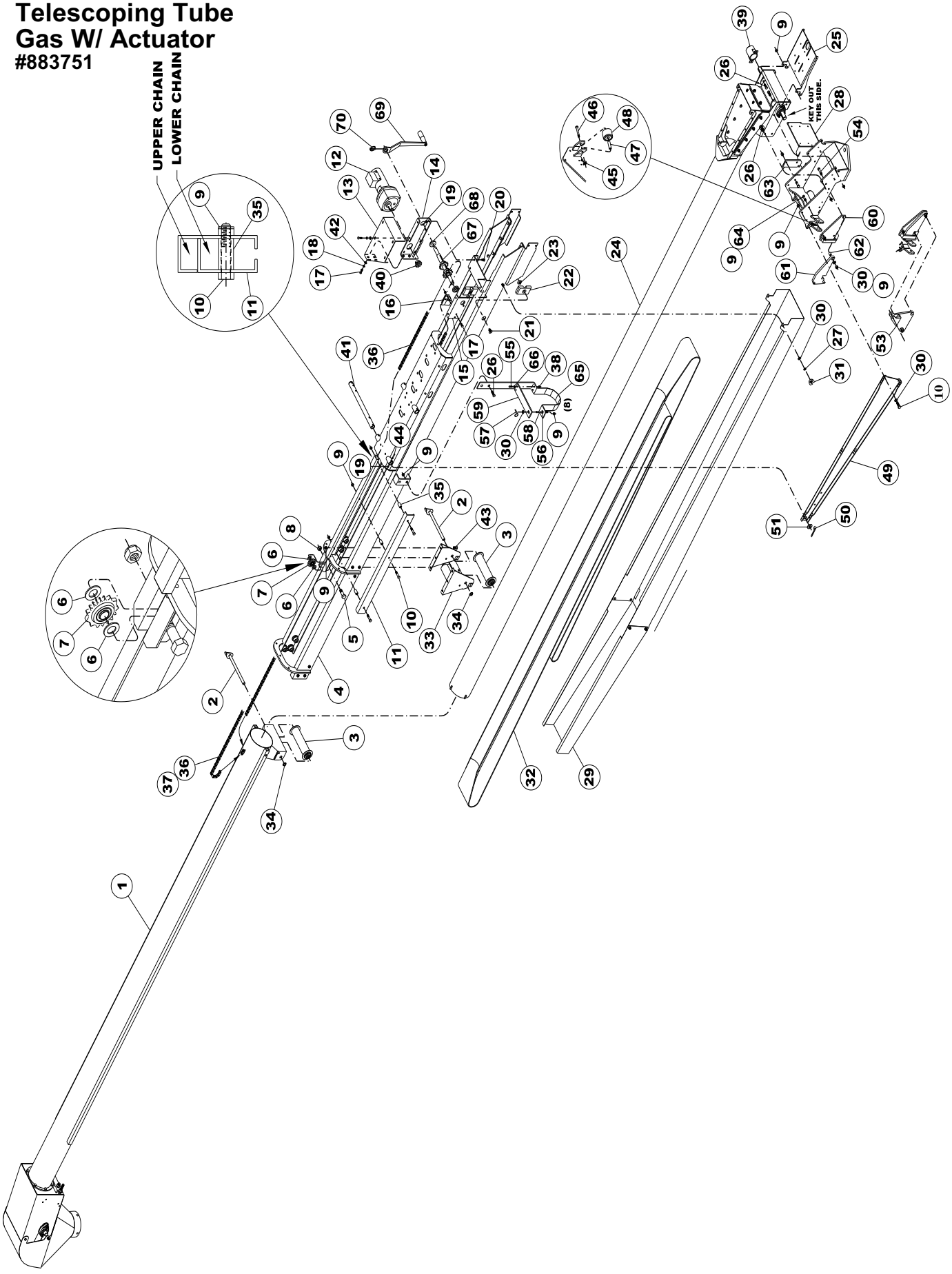

Seed Box Tote
Telescoping Tube
Gas W/ Actuator

#883751

Item	Qty	Part No.	Description
1	1	62884200	Top Tube
2	2	82638800	Roller Shaft
3	2	62891700	S-wrap Roller
4	1	62925300	Support Frame
5	1	01071000	HHCS 5/8" x 2"
6	2	330720	Machine Bushing 5/8" x 1 1/8" x 14ga
7	1	430603	Sprocket #40 17 Tooth
8	1	01572700	Nylock 5/8"
9	28	330837	Nylock 3/8"
10	8	335877	HHCS .375" x 1.750"
11	1	20982500	Chain Guard
12	1	03881000	Motor 12 volt
13	1	972026	Cover
14	1	971994	Motor Mount Right
15	1	972034	Motor Mount Left
16	1	234641	Prox Switch Mount
17	8	01144500	HHCS 5/16" x 3/4"
18	8	330845	Lock Washer 5/16"
19	6	331611	Nylock 5/16"
20	4	334409	Carriage Bolt 5/16" x 3/4"
21	2	03871100	Screw ½" x 3/4" Flat Socket
22	2	20972600	Nylon Guide
23	2	332197	Square Nut ½"
24	1	62892500	Bottom Tube
25	1	241752	Motor Mount Plate
26	12	01017300	HHCS 3/8" x 1"
27	14	330043	Lock Washer 3/8"
28	1	975342	Feed Tube Mount
29	1	62890900	Wind Guard
30	7	330894	Flat Washer 3/8"
31	2	334847	Wing Nut 3/8"
32	1	62896600	Belt 110 Crescent 8" x 47'-8 3/8"
33	1	62886700	Upper Roller Bracket
34	2	03869500	Retaining Ring 5/8" Self-Locking
35	3	20863700	Chain Guard Bushing
36		709501	Chain #40 x Ft -397 links
37	2	434084	Chain Connector #40
38			
39	1	82502600	Shaft End Guard
40	1	434225	Sprocket #40 10 tooth
41	1	313718	Shaft 1" x 11 7/8"
42	6	330852	Flat Washer 5/16"
43	6	330654	Carriage Bolt 3/8" x 1"
44	2	01152800	HHCS 5/16" x 1 3/4"
45	2	333310	Carriage Bolt ½" x 3½"
46	2	331363	Nylock ½"
47	2	30131700	Roller Bushing
48	2	60967700	Roller Assembly
49	2	31143100	Side Support Plate
50	2	334037	Cotter Pin 1/4" x 2½"
51	2	330407	Flat Washer 1"
52			
53	1	8334300	2Box Acutator WA
54	1	335729	HHCS .375 x 2.250 G5
55	3	01057900	HHCS 1/4" x 3/4"
56	1	330035	Hex Nut 3/8"
57	1	330928	Klik Pin 3/16"
58	1	16864100	Spout Pin Shaft
59	1	614321	Spout Strap
60	1	82972100	Stop
61	1	31142300	Detent Arm
62	1	62856800	Bushing
63	1	31138100	Side Stop
64	4	01158500	HHCS 3/8" x 1 1/4"
65	1	244384	Flexible Spout Hanger
66	2	02016400	Flat Washer 1/4"
67	1	62888300	Sprocket & Shaft Assy
68	2	20988200	Nylon 1.75OD x .78ID x .5
69	1	62889100	Hand Assy
70	1	338392	Klik Pin .250 x W/1.75 Ring

Seed Box Tote
Telescoping Tube
Gas Drive

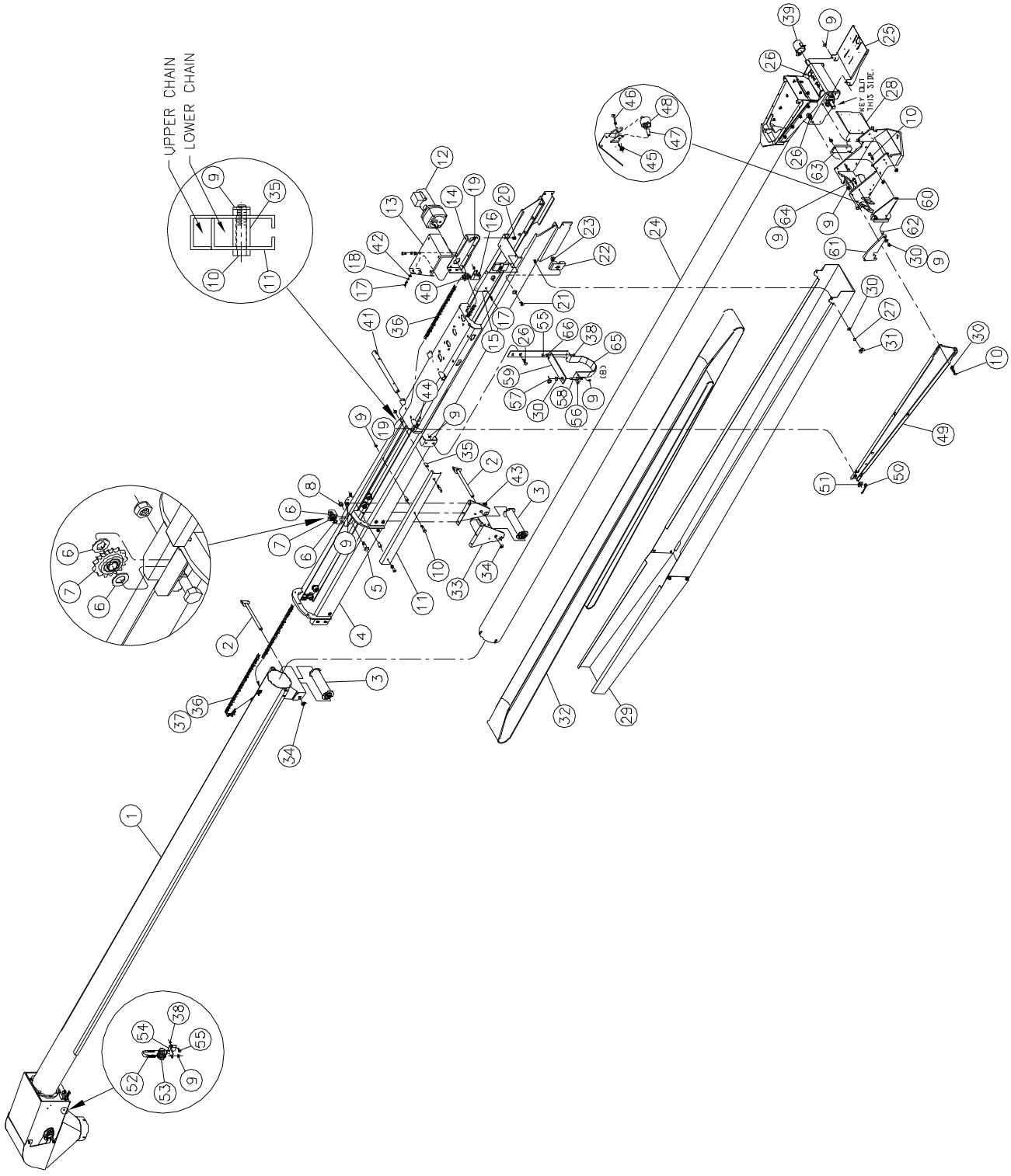

Seed Box Tote
Telescoping Tube
Gas Drive

#879072

Item	Qty	Part No.	Description
1	1	62884200	Top Tube
2	2	82638800	Roller Shaft
3	2	62891700	S-wrap Roller
4	1	62925300	Support Frame
5	1	01071000	HHCS 5/8" x 2"
6	2	330720	Machine Bushing 5/8" x 1 1/8" x 14ga
7	1	430603	Sprocket #40 17 Tooth
8	1	01572700	Nylock 5/8"
9	30	330837	Nylock 3/8"
10	8	335729	HHCS 3/8" x 2 1/4"
11	1	20982500	Chain Guard
12	1	03881000	Motor 12 volt
13	1	972026	Cover
14	1	971994	Motor Mount Right
15	1	972034	Motor Mount Left
16	1	234641	Prox Switch Mount
17	8	01144500	HHCS 5/16" x 3/4"
18	8	330845	Lock Washer 5/16"
19	6	331611	Nylock 5/16"
20	4	334409	Carriage Bolt 5/16" x 3/4"
21	2	03871100	Screw ½" x 3/4" Flat Socket
22	2	20972600	Nylon Guide
23	2	332197	Square Nut ½"
24	1	62892500	Bottom Tube
25	1	241752	Motor Mount Plate
26	12	01017300	HHCS 3/8" x 1"
27	14	330043	Lock Washer 3/8"
28	1	975342	Feed Tube Mount
29	1	62890900	Wind Guard
30	7	330894	Flat Washer 3/8"
31	2	334847	Wing Nut 3/8"
32	1	62896600	Belt 110 Crescent 8" x 47'-8 3/8"
33	1	62886700	Upper Roller Bracket
34	2	03869500	Retaining Ring 5/8" Self-Locking
35	3	20863700	Chain Guard Bushing
36		709501	Chain #40 x Ft -397 links
37	2	434084	Chain Connector #40
38	4	330522	Nylock 1/4"
39	1	82502600	Shaft End Guard
40	1	434225	Sprocket #40 10 tooth
41	1	313718	Shaft 1" x 11 7/8"
42	6	330852	Flat Washer 5/16"
43	6	330654	Carriage Bolt 3/8" x 1"
44	2	01152800	HHCS 5/16" x 1 3/4"
45	2	333310	Carriage Bolt ½" x 3½"
46	2	331363	Nylock ½"
47	2	30131700	Roller Bushing
48	2	60967700	Roller Assembly
49	2	31143100	Side Support Plate
50	2	334037	Cotter Pin 1/4" x 2½"
51	2	330407	Flat Washer 1"
52	1	01034800	U-bolt 3/8" x 1 1/4 x 2 1/4
53	1	03651700	Insulator
54	1	243642	Insulator Mount Plate
55	4	01057900	HHCS 1/4" x 3/4"
56	1	330035	Hex Nut 3/8"
57	1	330928	Klik Pin 3/16"
58	1	16864100	Spout Pin Shaft
59	1	614321	Spout Strap
60	1	82972100	Stop
61	1	31142300	Detent Arm
62	1	31141500	Bushing
63	1	31138100	Side Stop
64	4	01158500	HHCS 3/8" x 1 1/4"
65	1	244384	Flexible Spout Hanger
66	2	02016400	Flat Washer 1/4"

Support Frame Assembly
#62925300

Item	Qty	Part No.	Description
1	1	82657800	Support Frame
2	1	20945200	Frame Mount Left
3	1	20946000	Frame Mount Right
4	6	330654	HHCS 3/8" x 1"
5	1	04152500	Decal Patent#
6	18	330837	Nylock 3/8"
7	12	20947800	Nylon Roller
8	12	03866100	Shoulder Screw 3/8" x 1"

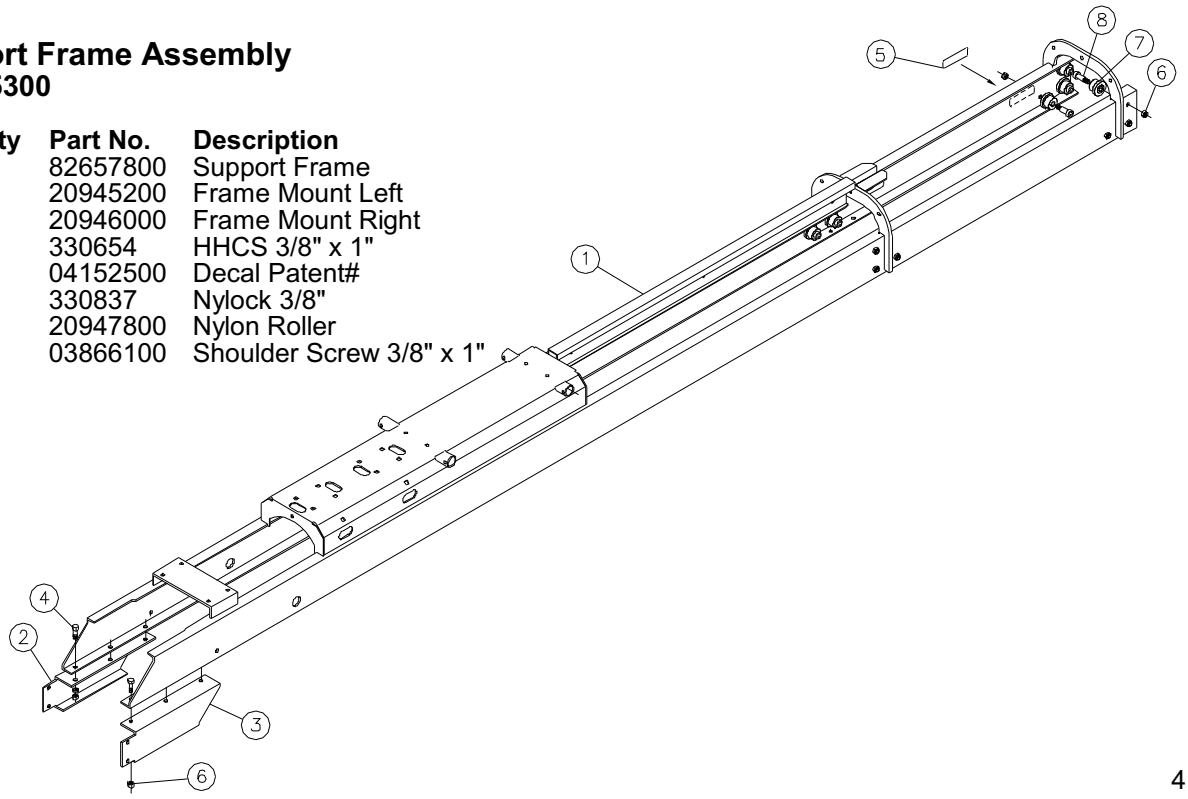

Seed Box Tote
Telescoping Tube

Top Tube Assembly
#62884200

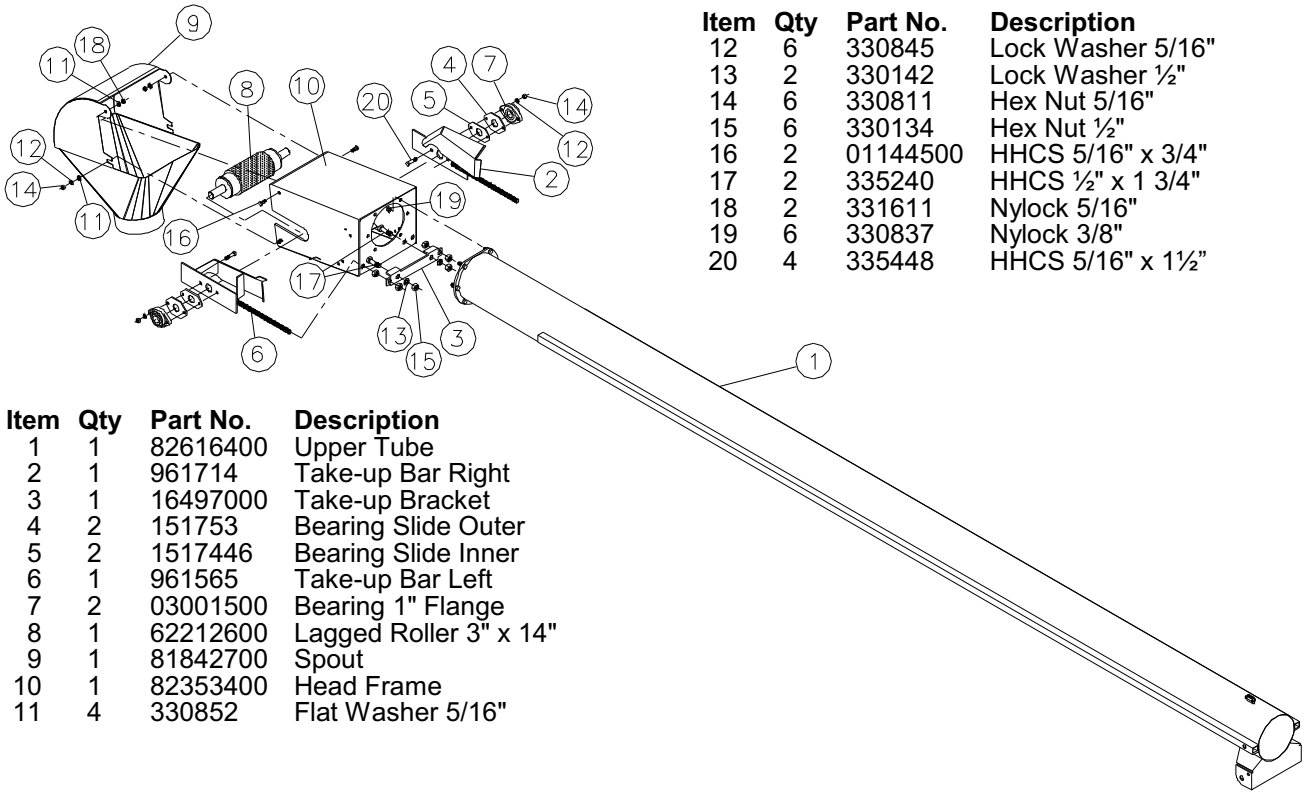

Item	Qty	Part No.	Description
1	1	82616400	Upper Tube
2	1	961714	Take-up Bar Right
3	1	16497000	Take-up Bracket
4	2	151753	Bearing Slide Outer
5	2	1517446	Bearing Slide Inner
6	1	961565	Take-up Bar Left
7	2	03001500	Bearing 1" Flange
8	1	62212600	Lagged Roller 3" x 14"
9	1	81842700	Spout
10	1	82353400	Head Frame
11	4	330852	Flat Washer 5/16"
12	6	330845	Lock Washer 5/16"
13	2	330142	Lock Washer ½"
14	6	330811	Hex Nut 5/16"
15	6	330134	Hex Nut ½"
16	2	01144500	HHCS 5/16" x 3/4"
17	2	335240	HHCS ½" x 1 3/4"
18	2	331611	Nylock 5/16"
19	6	330837	Nylock 3/8"
20	4	335448	HHCS 5/16" x 1½”

Lower Tube Assembly
#62892500

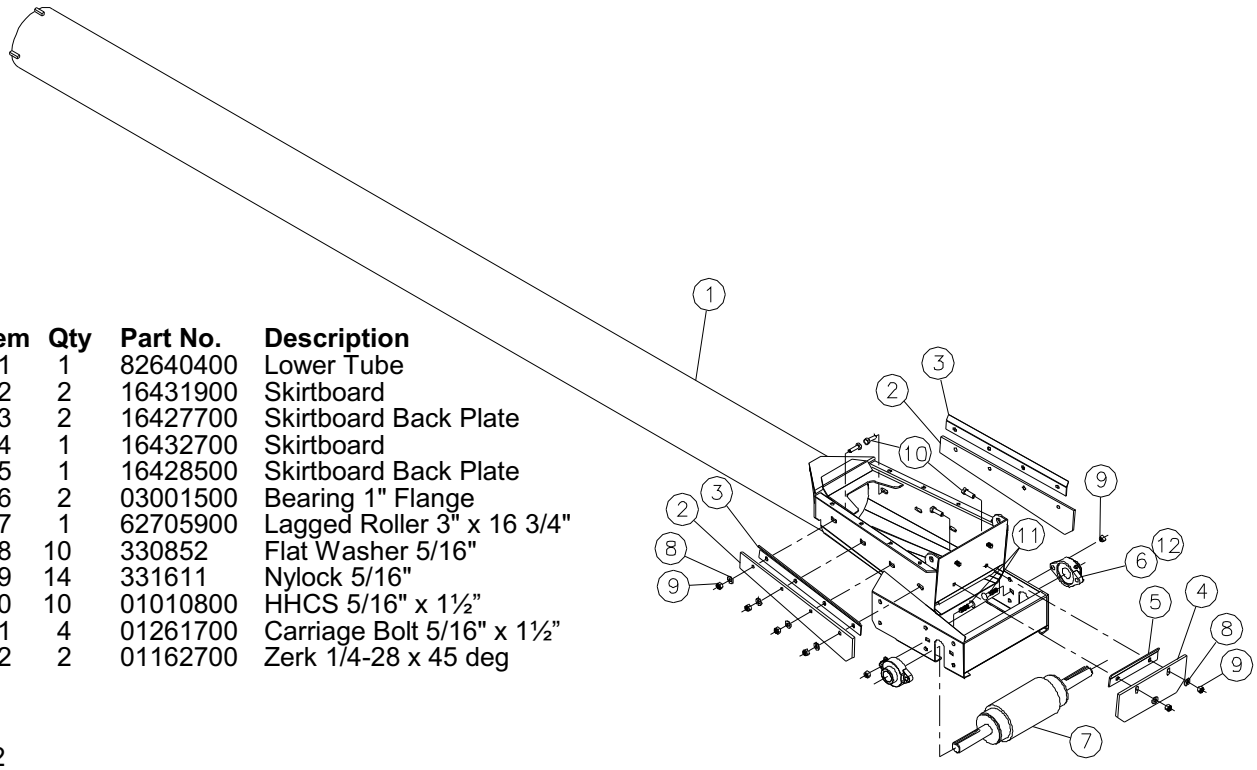

Item	Qty	Part No.	Description
1	1	82640400	Lower Tube
2	2	16431900	Skirtboard
3	2	16427700	Skirtboard Back Plate
4	1	16432700	Skirtboard
5	1	16428500	Skirtboard Back Plate
6	2	03001500	Bearing 1" Flange
7	1	62705900	Lagged Roller 3" x 16 3/4"
8	10	330852	Flat Washer 5/16"
9	14	331611	Nylock 5/16"
10	10	01010800	HHCS 5/16" x 1½”
11	4	01261700	Carriage Bolt 5/16" x 1½”
12	2	01162700	Zerk 1/4-28 x 45 deg

Seed Box Tote
Telescoping Tube

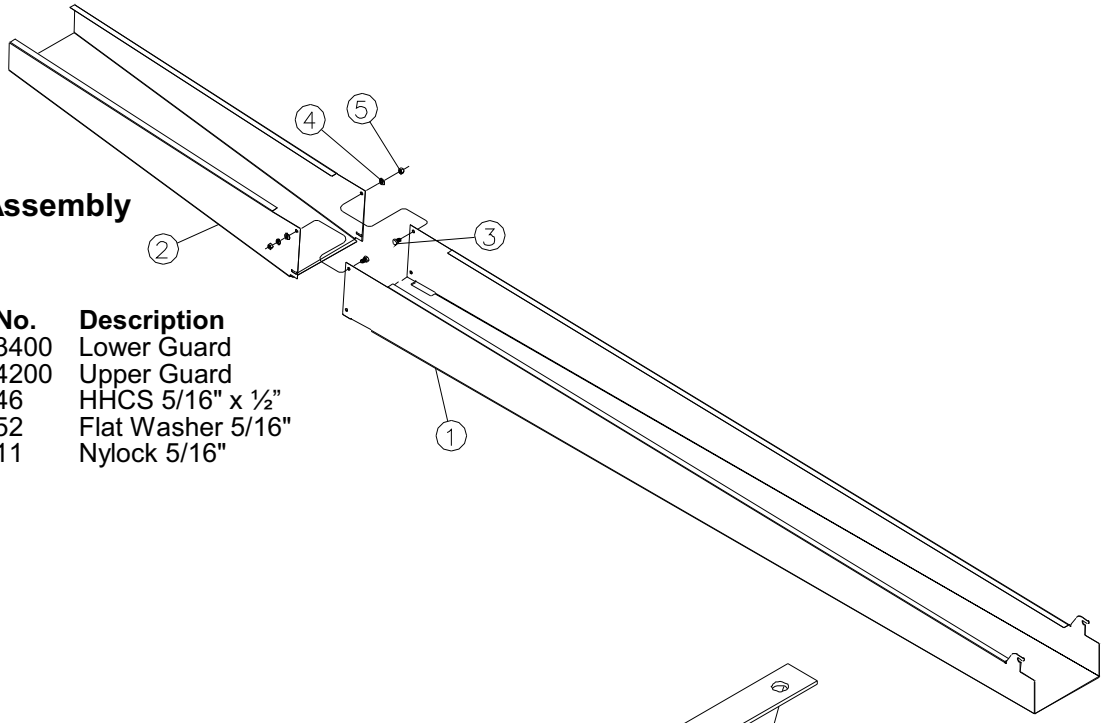

Wind Guard Assembly
#62890900

Item	Qty	Part No.	Description
1	1	20973400	Lower Guard
2	1	20974200	Upper Guard
3	4	331546	HHCS 5/16" x ½"
4	4	330852	Flat Washer 5/16"
5	4	331611	Nylock 5/16"

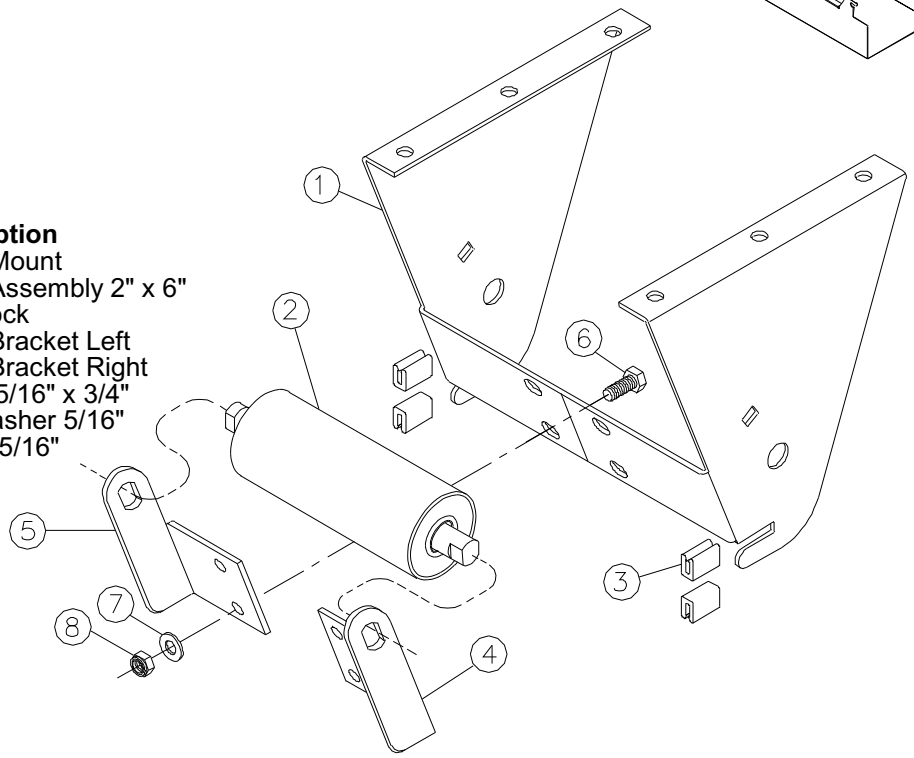

Upper Roller Bracket
#62886700

Item	Qty	Part No.	Description
1	1	82633900	Roller Mount
2	1	60190600	Roller Assembly 2" x 6"
3	4	20956900	Trim Lock
4	1	20953600	Roller Bracket Left
5	1	20959300	Roller Bracket Right
6	4	01144500	HHCS 5/16" x 3/4"
7	4	330852	Flat Washer 5/16"
8	4	331611	Nylock 5/16"

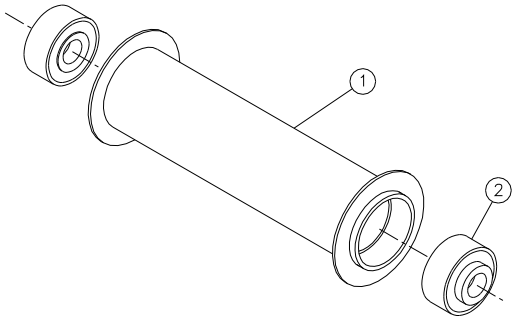

S-Wrap Roller Assembly
#62891700

Item	Qty	Part No.	Description
1	1	82639600	S-wrap Roller
2	2	401042	Bearing

Seed Box Tote
Telescoping Tube

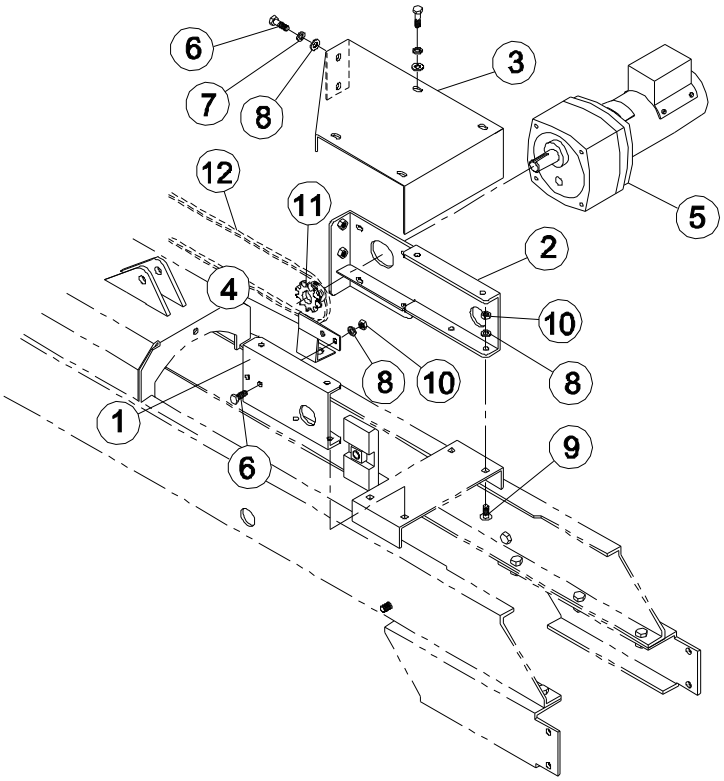

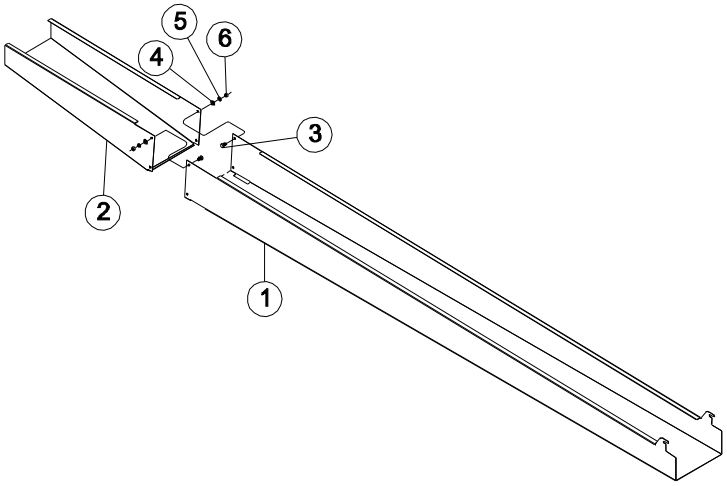

Electric Winch

Item	Qty	Part No.	Description
1	1	972034	Motor Mount
2	1	971994	Motor Mount -240 - 2 Box
3	1	972026	Cover -240 - 2 Box
4	1	234641	Proximity Switch Mount
5	1	03881000	Motor 12V
6	8	01144500	HHCS 5/16" x 3/4"
7	8	330845	Lock Washer 5/16"
8	6	330852	Flat Washer 5/16"
9	4	01047000	Carriage Bolt 5/16" x 1"
10	6	330811	Hex Nut 5/16"
11	1	434225	Sprocket #40 10 Tooth
12	1	434217	Chain #40 x 42P -160
	1	434209	Chain #40 x 63P -240

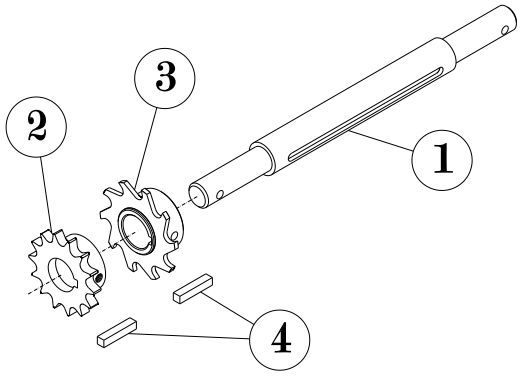

Shaft & Sprocket Assembly #62888300

Item	Qty	Part No.	Description
1	1	20987400	Shaft
2	1	433037	Sprocket #40 17 Tooth
3	1	82635400	Sprocket & Hub 1" Bore
4	2	10490100	Key 1/4" x 1 1/4"

On units with electric winch option, 82635400 is not used. Replaced with 433037.

Handle Assembly #62889100

Item	Qty	Part No.	Description
1	1	82637000	Handle
2	1	335430	HHCS 3/8" x 5"
3	2	330894	Flat Washer 3/8"
4	2	330035	Hex Nut 3/8"
5	1	20929200	Rubber Bushing

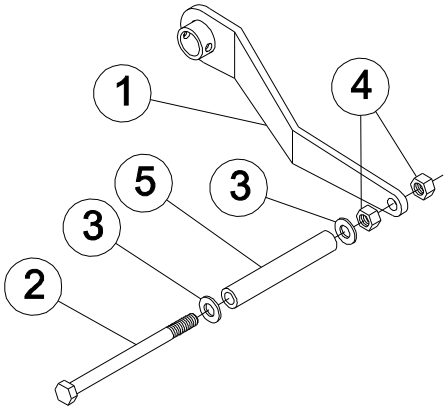

Seed Box Tote
Spouts

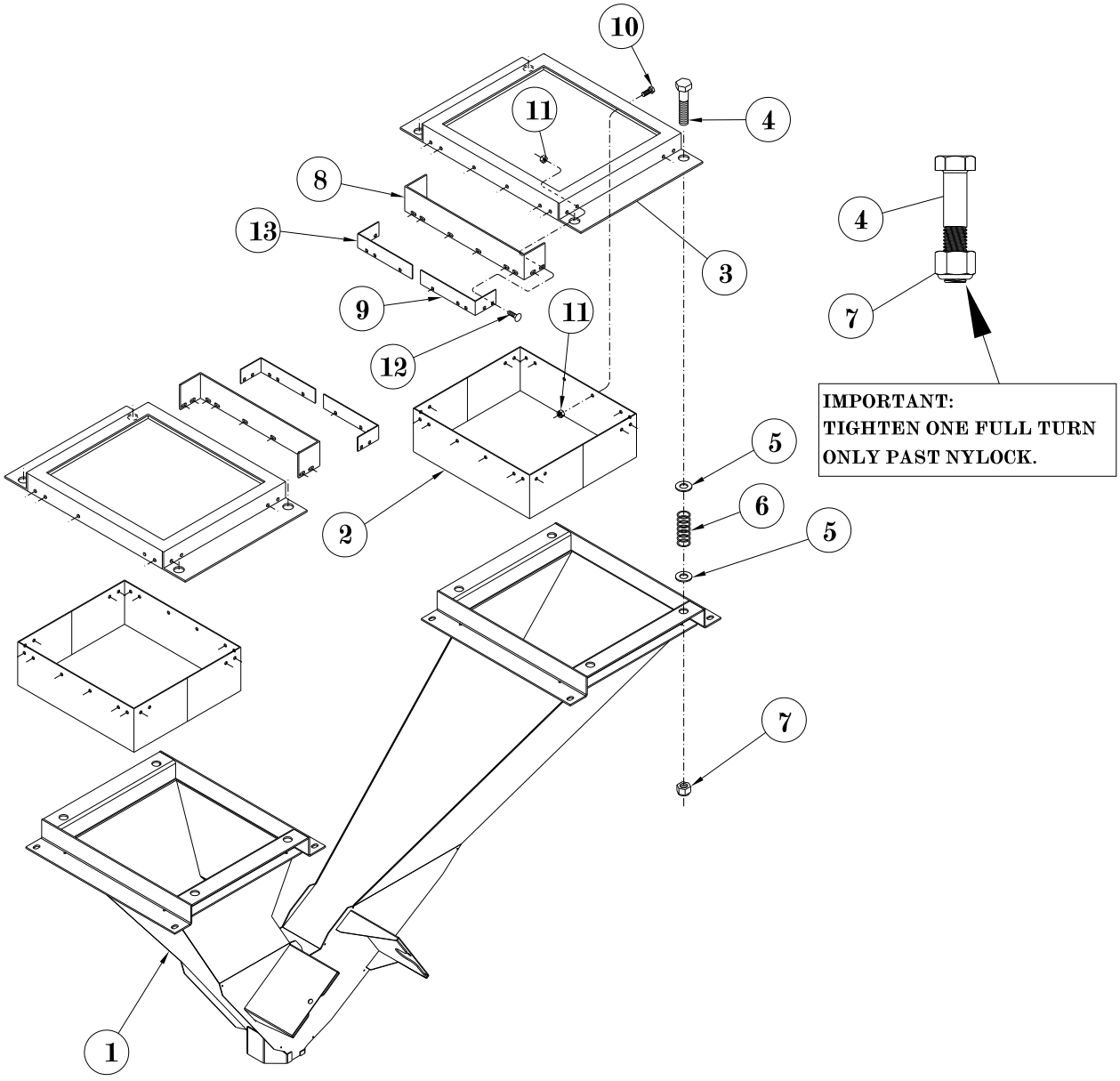

Spout Assembly
#878793

Item	Qty	Part No.	Description
1	1	975359	Spout
2	2	82105800	Inside Frame
3	2	82107400	Frame Top
4	8	335620	HHCS 5/8" x 3"
5	16	330183	Flat Washer 5/8"
6	8	501031	Spring
7	8	01572700	Nylock 5/8"
8	2	32253700	Deflector Skirtboard
	4	17252800	Prior August 2017
9	2	32254500	Deflector Back-up
	4	17251000	Prior August 2017
10	16	01057900	HHCS 1/4" x 3/4"
11	36	330522	Nylock 1/4"
12	20	337949	Carriage Bolt 1/4" x 3/4"
13	2	32222200	Deflector Back-up
	4	17251000	Prior August 2017

Flexible Tube

Units with Remote

#03968500 - 3 Section Spout with Molded Handle

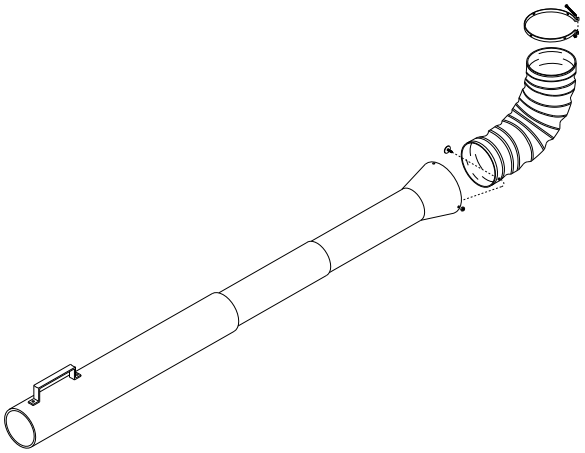

Units without remote

#62369400 - Flexible Spout Assembly

Item	Qty	Part No.	Description
1	1	01526300	Telescoping Feed Spout - 3 piece
		03423100	Hose Clamp
2	2	01065200	Bolt 1/4-20 x 1"
3	1	03723400	Switch
4	1	62748900	Handle Assembly
5	2	332205	Hex Nut 1/4"
6	1	571281	Cable Tie 24"
7	1	62380100	Retractable Wire
8	1	571299	Cable Tie 8½"
9	2	330050	Lock Washer 1/4"
10	2	01059500	Clamp 5/16"

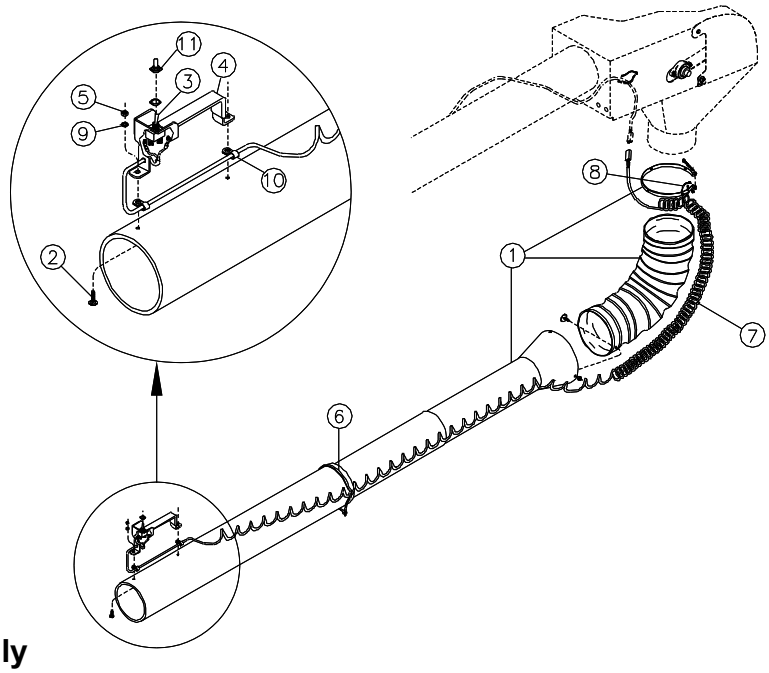

#62715800 - Flexible Spout Assembly

Item	Qty	Part No.	Description
1	1	01526300	Telescoping Feed Spout - 3 piece
		03423100	Hose Clamp
2	2	01065200	Bolt 1/4-20 x 1"
3	1	03723400	Switch
4	1	62748900	Handle Assembly
5	2	332205	Hex Nut 1/4"
6	1	571281	Cable Tie 24"
7	1	62380100	Retractable Wire
8	1	571299	Cable Tie 8½"
9	2	330050	Lock Washer 1/4"
10	2	01059500	Clamp 5/16"

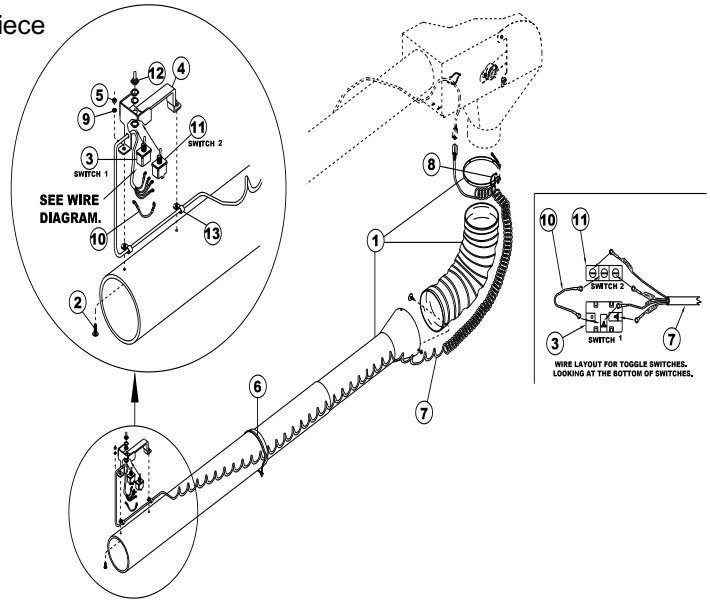

Seed Box Tote
Engine Assembly

#63046700 - Engine Assembly

Item	Qty	Part No.	Description
1	1	03750400	Engine 5.5 HP Electric Start
2	1	82820200	Solenoid Motor Mount
3	1	03961000	Solenoid Sealed Linear
4	1	04123600	Throttle Spring
5	2	05316500	Decal “Caution Fuel Off”
6	1	16612400	Sheave 3.5 Cast Iron
7	1	03959400	HHCS 1/4-28 x 1"
8	2	01057900	HHCS 1/4-28 x 3/4"
9	2	02016400	Flat Washer 1/4"
10	2	330522	Nylock 1/4"
11	1	62774500	Solenoid Ground Wire
12	1	03960200	Hex Nut 1/4-28
13	2	339242	Screw M6-1 x 16mm Flange

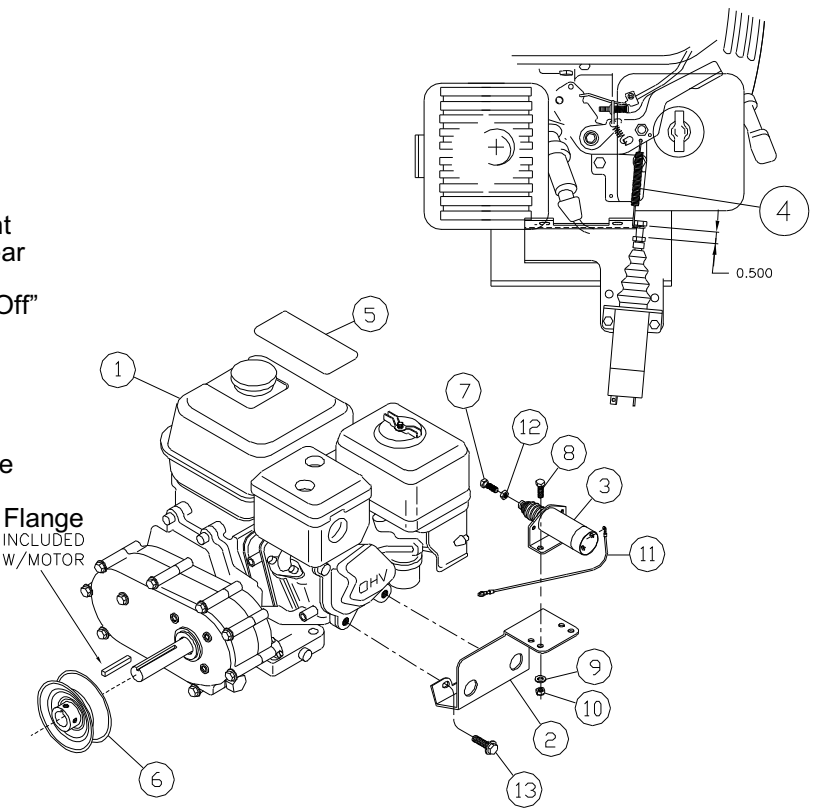

#880658 - Kohler Engine Assembly (Units w/Talc)

Item	Qty	Part No.	Description
1	1	614834	Kohler Engine 7 HP 10 Amp
2	1	277723	Motor Mount
3	1	03961000	Solenoid
4	1	04123600	Throttle Spring
5	2	05316500	Decal “Caution Fuel Off”
6	1	16612400	Sheave 3½" Cast
7	1	03959400	HHCS 1/4-28 x 1"
8	3	01057900	HHCS 1/4 x 3/4"
9	5	02016400	Flat Washer 1/4"
10	3	330522	Nylock 1/4"
11	1	339317	Shoulder Bolt 6mm x 6mm
12	2	03960200	Hex Nut 1/4-28
13	4	00352500	HHCS M8 x 16
14	1	277731	Throttle Linkage Plate
15	1	608711	Bearing 1/4 x 3/8 x 3/8
16	1	608695	Thrust Bearing 3/8 x 3/4 x 1/16
17	1	608703	Thrust Bearing 3/8 x 3/4 x 1/8
18	4	330852	Flat Washer 5/16
19	4	330845	Lock Washer 5/16
20	1	339325	Nut Class 6 M5
21	1	614842	Return Spring

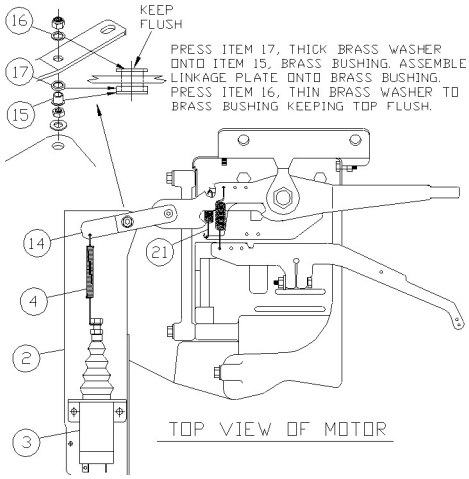

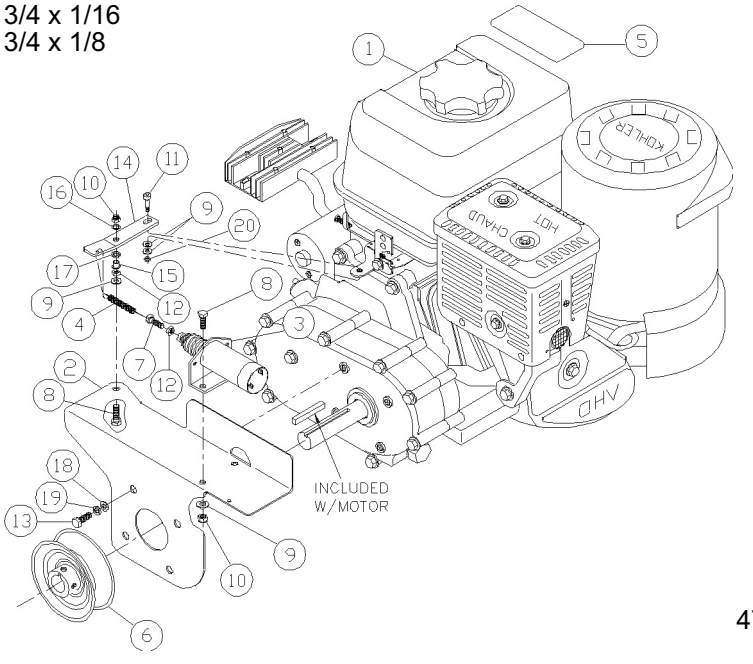

Actuator Assy

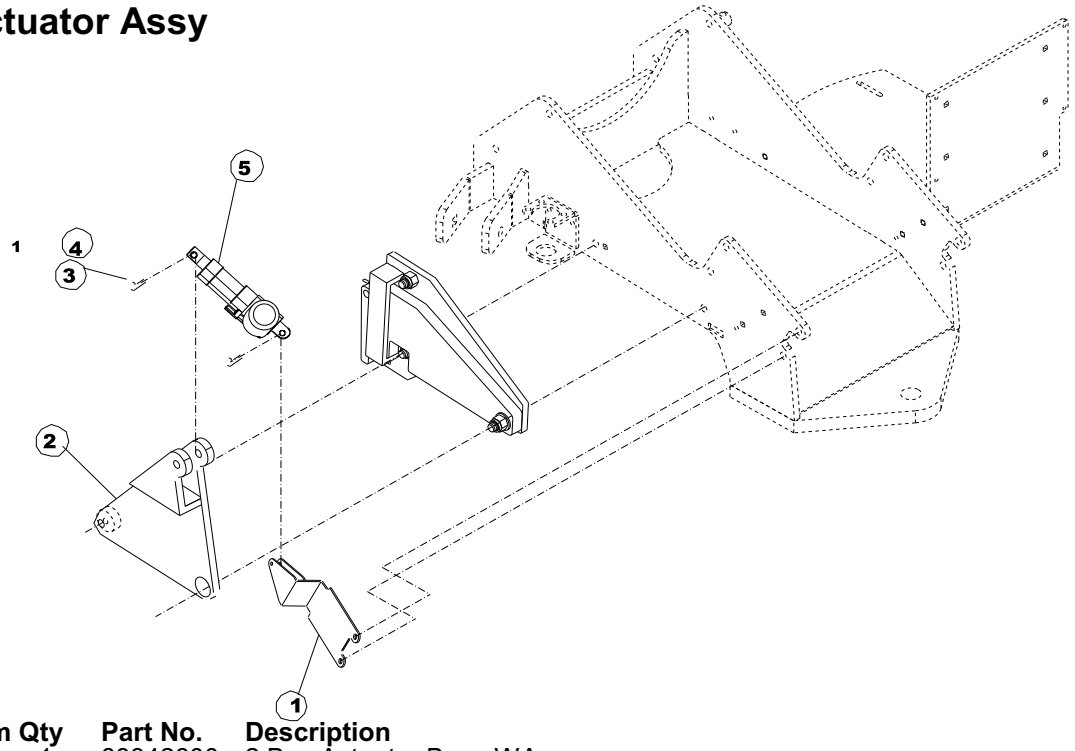

Item	Qty	Part No.	Description
1	1	83342600	2 Box Actuator Base WA
2	1	83343400	2 Box Actuator WA
3	2	04497400	Split Ring .0625 x 1.00
4	2	04496600	Clevis Pin .1875 x 1.750
5	1	883710	Actuator Assy 2020

Dry Talc

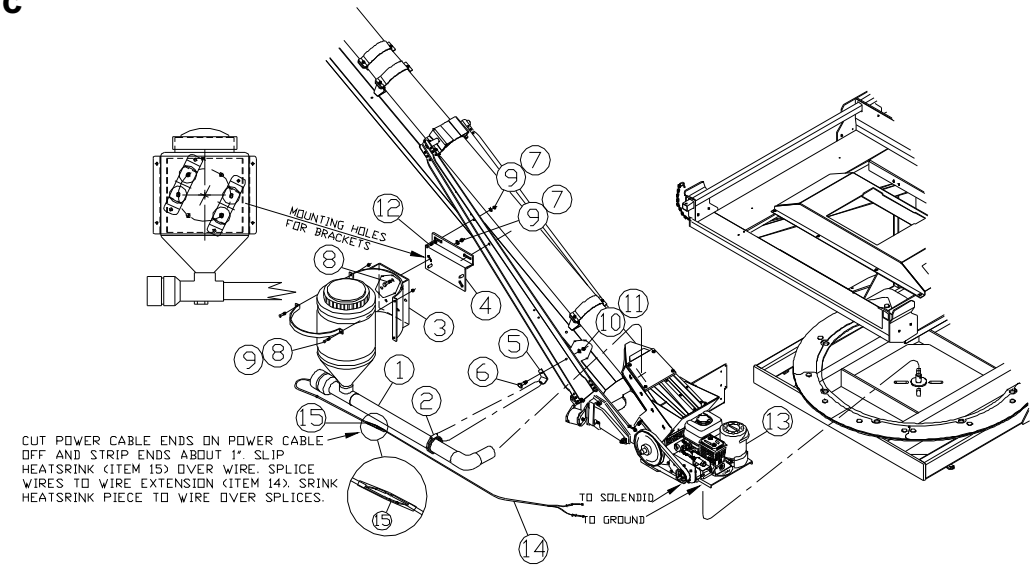

Dry Talc Assembly

Item	Qty	Part No.	Description
1	1	615039	Free Flo Inoculator Kit
2	1	606392	Hose Clamp 2½" Worm Drive
3	1	978239	Talc Mount
4	2	82489600	Belt Cover Mount
5	1	278465	Talc Clamp Plate
6	1	335919	Carriage Bolt 3/8 x 1 1/4"
7	1	330852	Flat Washer 3/16"
8	4	01010800	HHCS 5/16 x 1"
9	4	331611	Nylock 5/16"
10	4	330837	Nylock 3/8"
11	2	330852	Flat Washer 5/16"
12	2	01011600	HHCS 5/16 x 1 1/4"
13	1	880658	Engine Assembly
14	1	615047	Inoculator Wire Extension
15	4"	03638400	Heatshrink 1/4 x 4'

Remote Enclosure Assembly Actuator
#883405

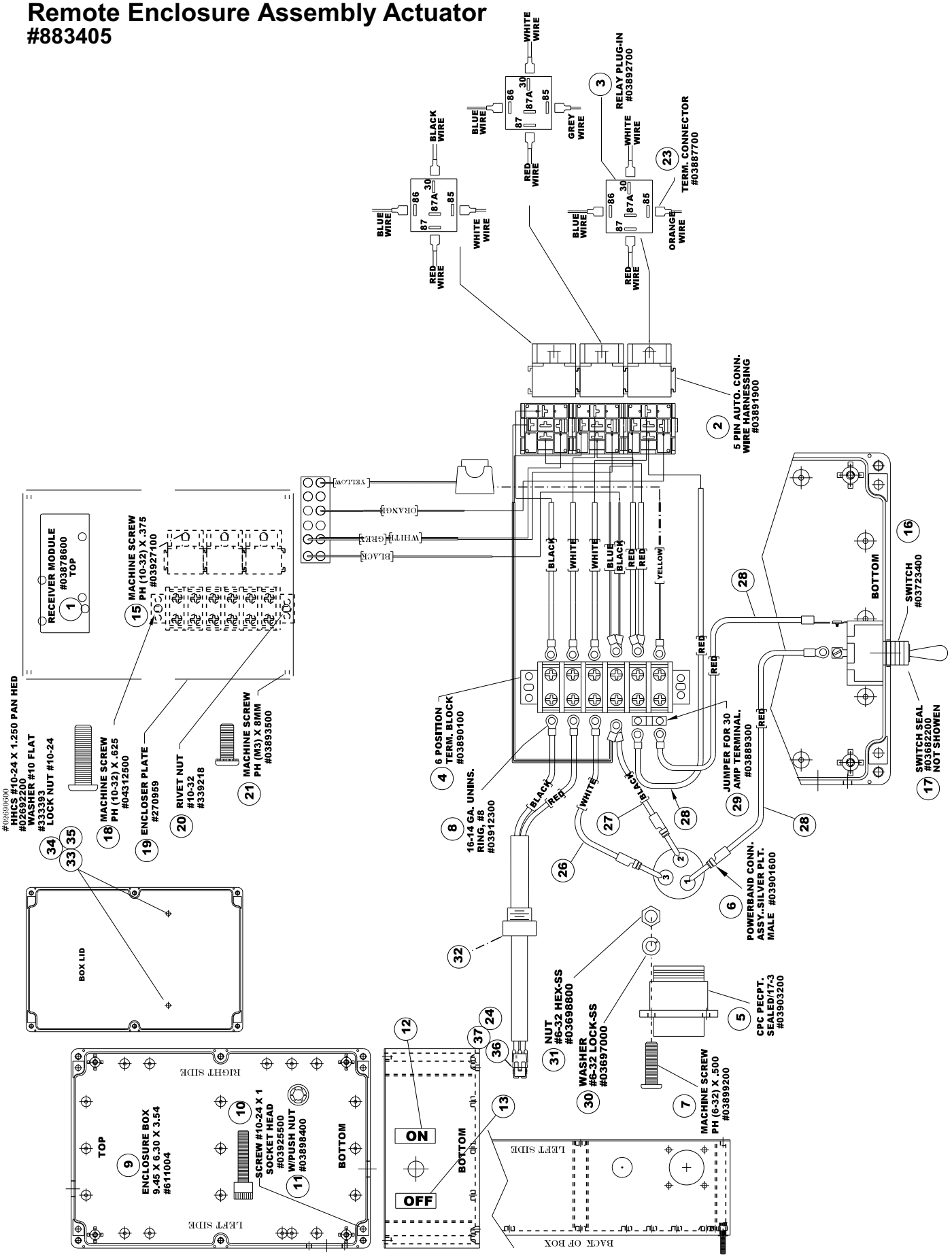

Remote Enclosure Assembly Actuator

#883405

Item	Qty	Part No.	Description
1	1	03962800	REMOTE RECEIVER
2	3	03891900	RELAY SOCKET ALLIED #70102789
3	3	03892700	RELAY ALLIED #70158370
4	1	03890100	TERMINAL BLOCK 6 POS
5	1	03903200	CONNECTOR RECP. 3P SQ FLANGE
6	3	03901600	CONTACT PIN .125-SIZE8 PIN 50A
7	4	03899200	SCREW # 6-32X .50 PHIL PAN HD
8	17	03912300	WIRE TERM 16-14GA #8-32 NON-IN
9	1	644088	ENCLOSURE BOX
10	4	03925500	SCREW #10-24X 1.000 SOCKET HD
11	4	03898400	PUSH NUT .438
12	1	04168100	DECAL "ON"
13	1	04169900	DECAL "OFF"
14	2	03963600	REMOTE TRANSMITTER
15	1	03927100	SCREW #10-32*.375 PHIL PAN
16	1	03723400	SWITCH TOGGLE SS206S-BG
17	1	03682200	SWITCH BOOT SEAL
18	2	04312500	SCREW #10-32X .625 PANHD PHIL
19	1	270959	SHT SS16GA 5.81*8.313
20	7	339218	RIVET NUT #10-32 HEAVY DUTY
21	4	03893500	SCREW M3-.5*8 PHIL PAN-EXT
22	.83'	03918000	WIRE 18GA BLUE X FT
23	12	03887700	TERMINAL CONN RELAY
24	1	03414000	AT TOWER 2POLE
25	.83'	03919800	WIRE 18GA WHITE X FT
26	1.6'	03916400	WIRE 12GA WHITE X FT
27	.83'	03914900	WIRE 12GA BLACK XFT
28	2.5'	03917200	WIRE 12GA RED X FT
29	1	03889300	TERMINAL BLOCK JUMPER
30	4	03697000	WASHER # 6 LOCK SS
31	4	03698800	NUT # 6-32 HEX SS
32	1	03412400	STRAIN RELIEF 1/4" TO 5/16
33	2	02690600	SCREW #10-24X 1.250 PAN
34	2	02692200	WASHER #10 FLAT
35	2	333393	NUT #10-24 LOCK
36	2	03409000	AT TERMINAL FEM 16-14GA
37	2	03406600	AT CABLE SEAL GRN 18-16G

Remote Enclosure Assembly
#63444400

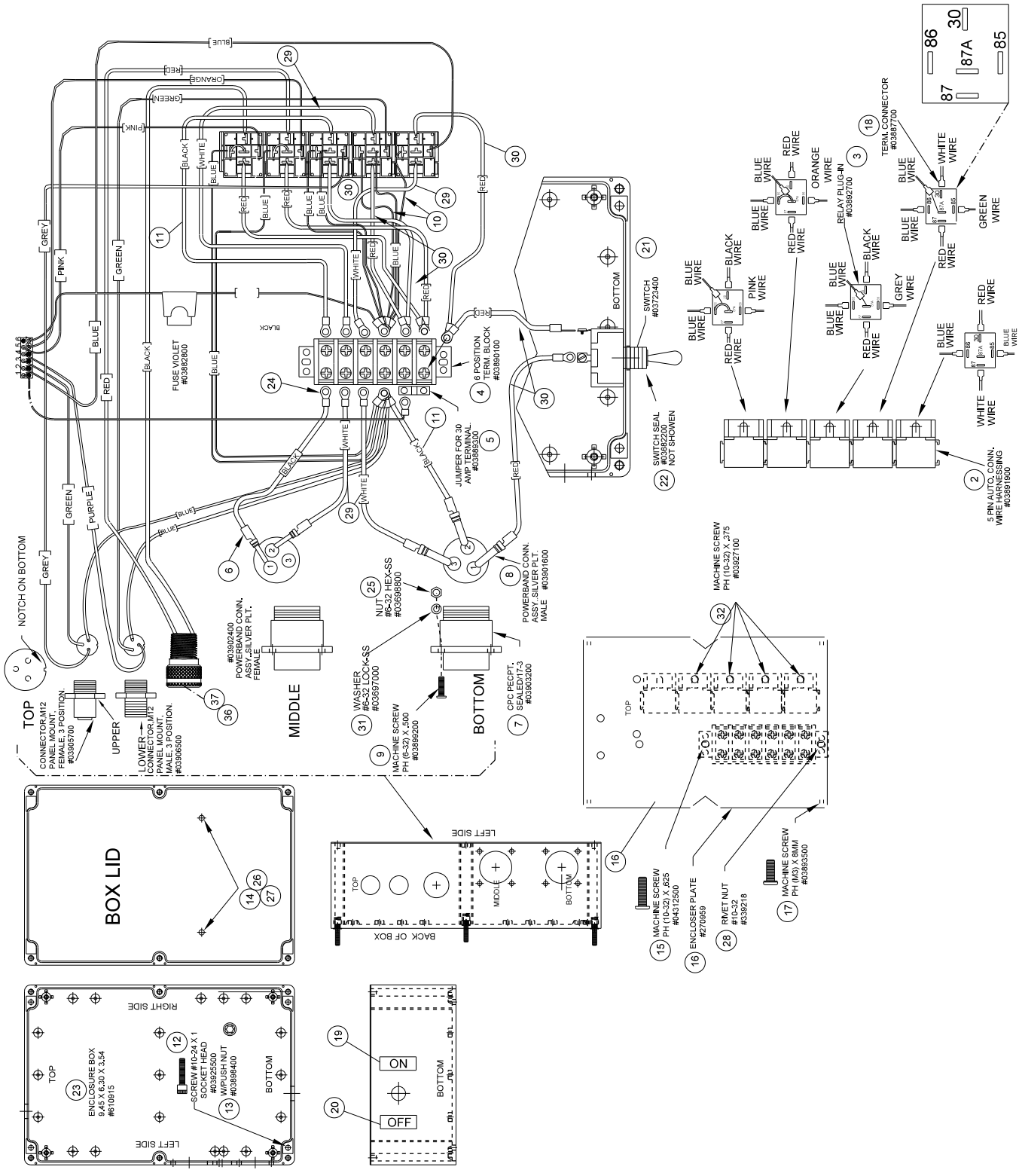

Remote Enclosure Assembly
#63444400

Item	Qty	Part No.	Description
1	1	04340600	Wireless Transmitter/Receive
2	5	03891900	Relay Socket
3	5	03892700	Relay
4	1	03890100	Terminal Block 6 Position
5	1	03889300	Terminal Block Jumper 30AMP
6	3	03902400	Contact Socket .125 Size 8
7	2	03903200	Connector Recepte 3POS SQ Flange
8	3	03901600	Contact Pin .125 Size 8
9	12	03899200	Screw #6-32 X .500 Phillips Pan HD
10	7'	03918000	Wire 18GA Blue
11	3'	03914900	Wire 12GA Black
12	4	03925500	Screw #10-24 X 1 Socket HD
13	4	03898400	Push Nut .438
14	2	02690600	Screw #10-24 X 1.25 Phillips Pan HD
15	2	04312500	Screw #10-32 X .625 Phillips Pan HD
16	1	270959	Enclosure Plate
17	4	03893500	Screw M3-.5 X 8 Phil Pan HD Ext LW
18	24	03887700	Terminal Conn .250 Push ON 14-16GA
19	1	04168100	Decal ON
20	1	04169900	Decal OFF
21	1	03723400	Toggle Switch
22	1	0382200	Switch Boot Seal
23	1	32733800	Enclosure Box W/ Holes
24	27	03912300	Wire Terminal 16-14GA #8-32 Non-In
25	12	03698800	Hex Nut #6-32 SS
26	2	02692200	Flat Washer #10
27	2	333393	Lock Nut #10
28	7	339218	River Nut #10-32 Heavy Duty
29	4'	03916400	Wire 12GA White
30	5'	03917200	Wire 12GA Red
31	12	03697000	Lock Washer #6-32SS
32	4	03927100	Screw #10-32 X .375 Philipps
33	2	03963600	Remote Transmitter
34	1	03906500	Connector M12 Male
35	1	03905700	Connector M12 Female
36	1	03412400	Strain Relief .250 to .313
37	1	01076900	Nut .500 NPT Lock Conduit

Remote Control

To Program Remote:
Power up the unit. When you do so, the LED on the receiver unit will flash RED four times. This indicates that the unit has received power. There is magnetically controlled switching circuitry embedded in the receiver unit. Place a fairly powerful magnet over the receiver "learn" area (near R11) for a brief moment (3 seconds), and then remove it. The LED will go to constant RED state. Now immediately press any button on the transmitter you are attempting to learn in. The LED will go to a GREEN/YELLOW color. This confirms that the receiver has picked up a signal from the transmitter, and subsequently learned that signal. Communication has been established, and it is now ready to function properly.

Troubleshooting:
Should the above procedure not complete successfully, wait until the LED light goes out, and repeat the procedure. If for any reason you experience a second failure of the learn procedure, do the following. Place the magnet on the learn area and the LED will go to a constant RED state. Leave the magnet in place on the receiver until the LED light goes out (approximately 10 seconds). This action completely clears the receiver's memory. It's akin to reformatting, or freeing up all of the space on a computer hard drive. Once you have cleared the memory, proceed with the standard learn procedure detailed above for each of the key fob transmitters you wish to use with the device. If, after all of the procedures detailed above are completed, the unit is still not functioning, check the battery in the transmitter once again. (Occasionally, even new batteries fail, or are defective from the factory. If you have a voltage meter, confirm that battery voltage is at least 2.7 volts.) If that still does not solve the problem, contact CrustBuster/Speed King, Inc. At (620) 227-7106.

Battery:
It is recommended that the battery be replaced every year.

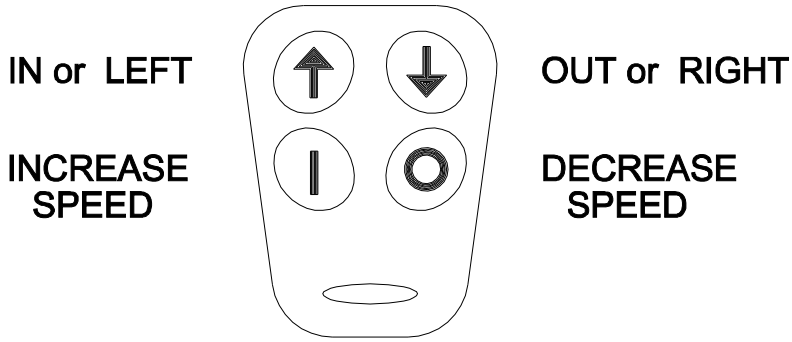



Back Load Trailer

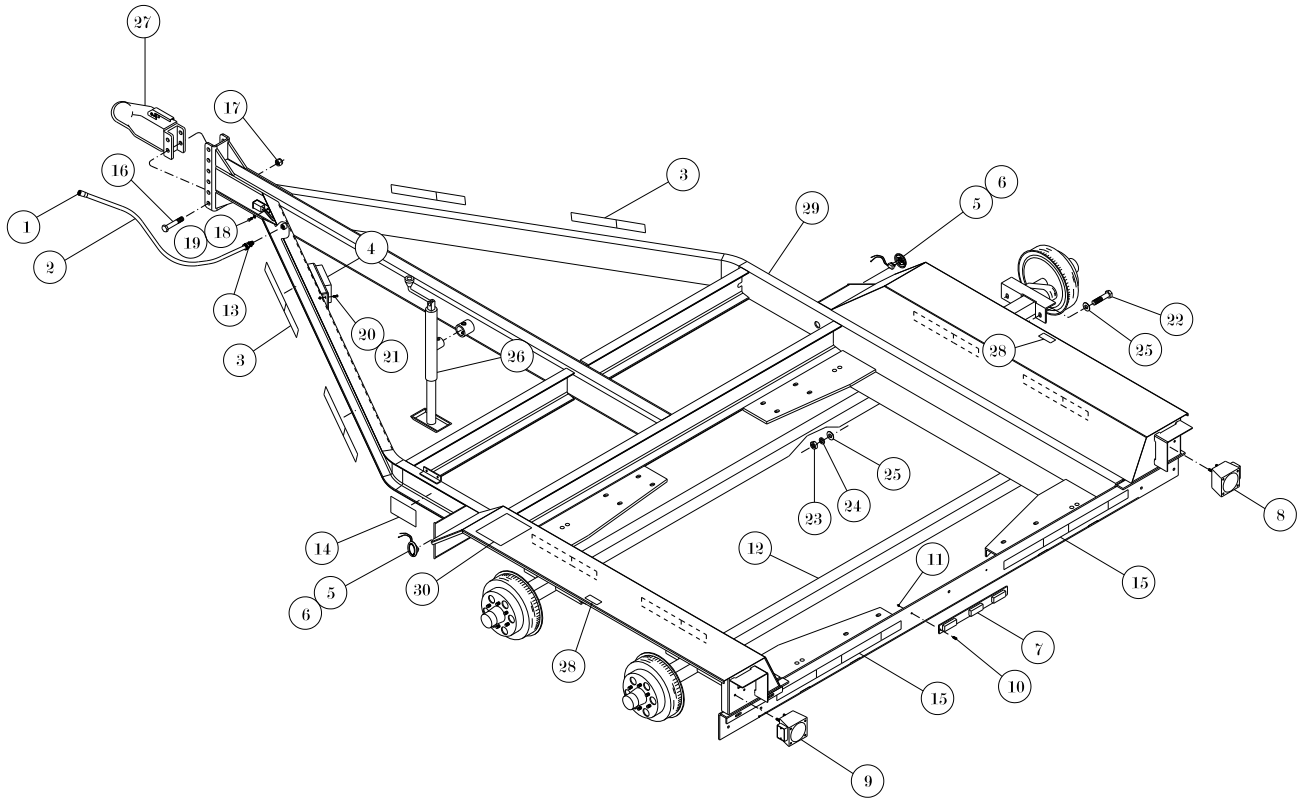

Item	Part No.	Description
1	616540	Wire RV Plug 12-706
2	609917	Conductor Wire 14-6
3	03726700	Reflector Tape 2" Red/White
4	607677	Break Away Kit W/Box & Battery
5	609644	Light Mounting Kit
6	631164	Clearance Light Amber LED
7	613372	Led Red Light Bar
8	613380	Right Tail Light-Red LED
9	613406	Left Tail Light-Red W/Tag Light
10	338525	Screw #12-24 x 3/4" PH Machine
11	338533	#12-24 Hex Nylock
12	609842	Trailer Axle - 6000 Lbs
13	573470	Strain Relief ½" to 5/8"
14	609727	Vin Label
15	03726700	Reflector Tape 2" Red/White

Item	Part No.	Description
16	338517	HHCS 5/8" X 4 ½" Grade 8
17	01572700	Nut 5/8" Hex Nylock
18	01552900	HHCS .250 X 1.00 Self Drill
19	330050	Lock Washer 1/4"
20	331835	HHCS 1/4" X 1"
21	330522	Nut 1/4" Hex Nylock
22	338541	HHCS 5/8" X 1" ½" SAE
23	332494	Hex Nut 5/8" SAE
24	330878	Lock Washer 5/8" SAE
25	330183	Flat Washer 5/8"
26	530444	Jack 5000# S/Mtg Brkt
27	609669	Coupler 20000# - 2 5/16"
28	608737	No Step Decal
29	975367	2 Box Trailer WA Back Load
30	614818	Caution Decal Fender

Trailer RV Plug

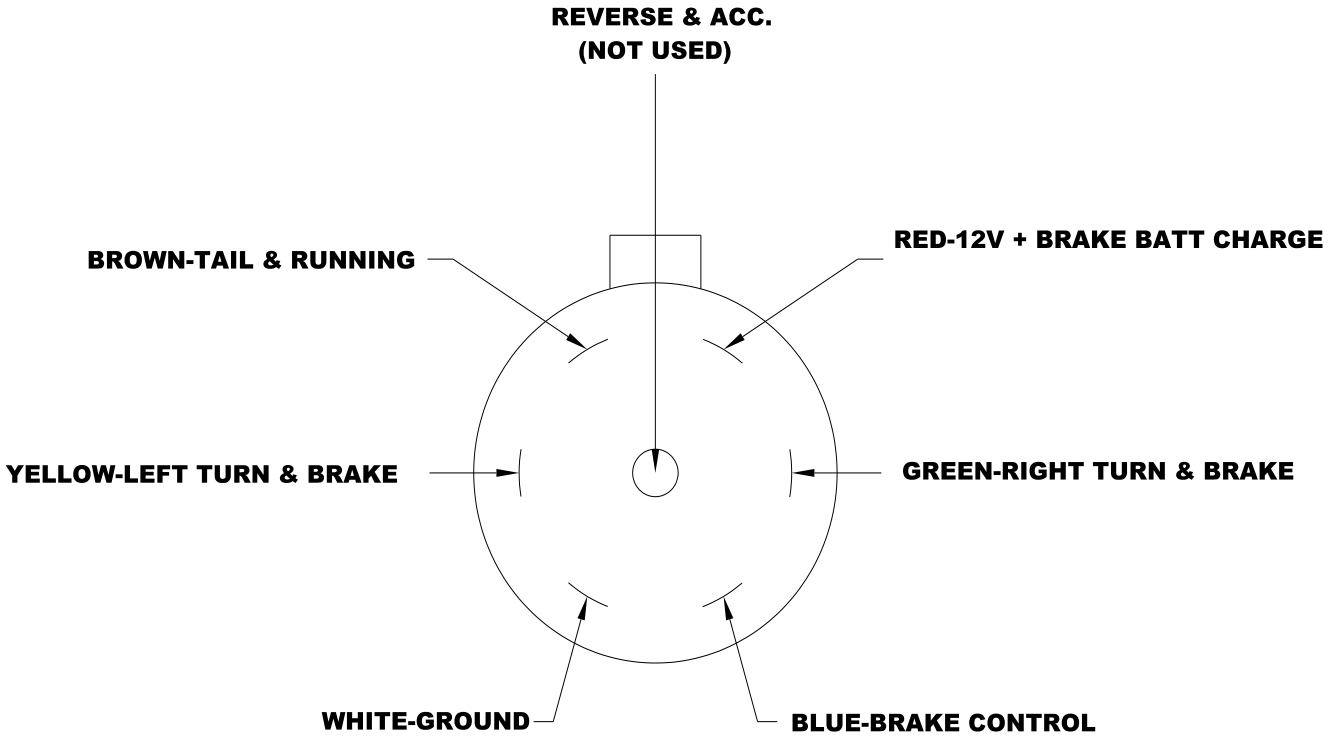

NOTE: LOOKING FROM BACK OF PLUG

CrustBuster
SPEED KING INC.
P.O.Box 526 ● Spearville Kansas 67876 ● (620) 227-7106 ● crustbuster.com